REDPATH

"The Beast" Polycarbhouse

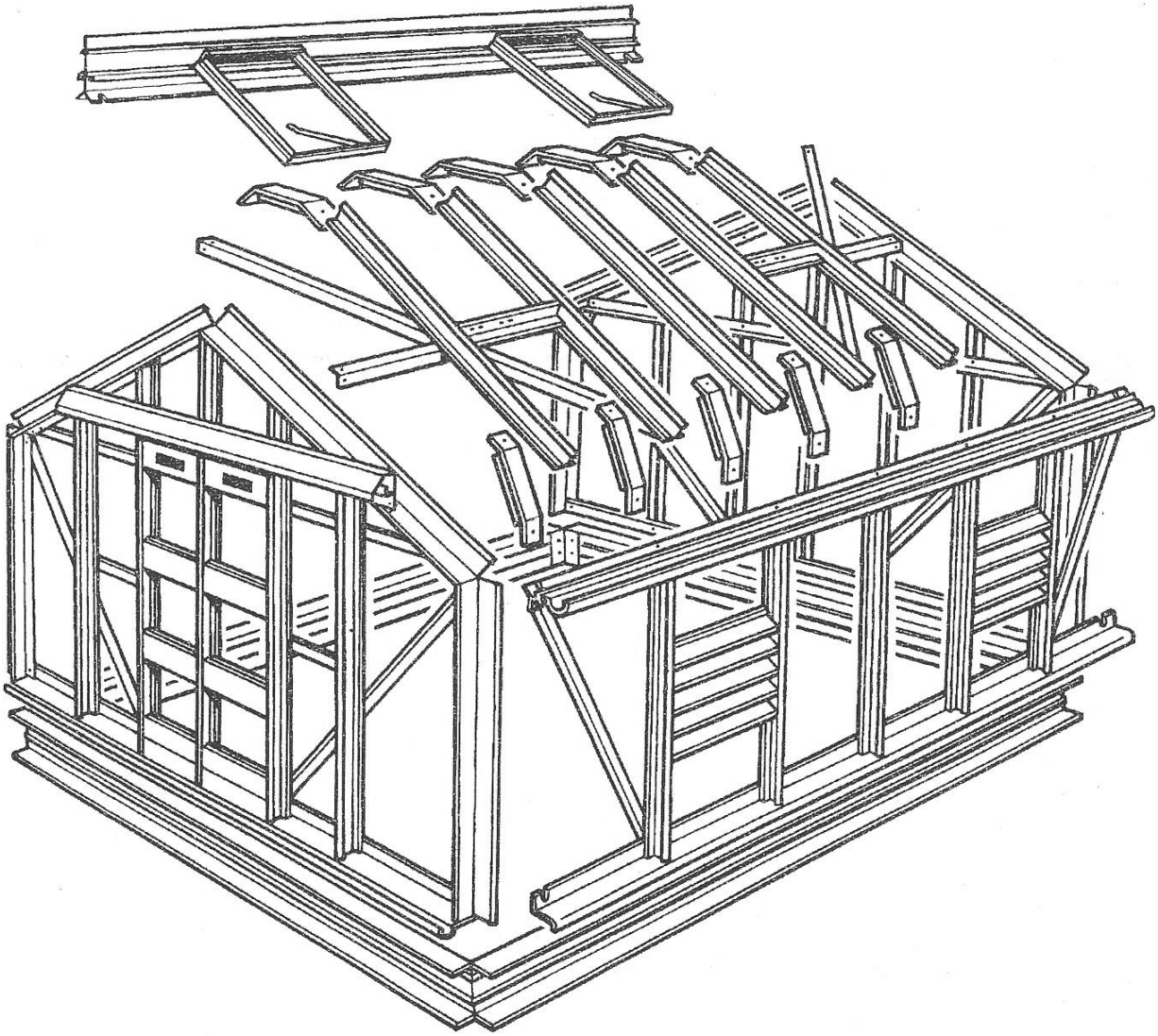

Instructions & Illustrations for the Redpath Beast Polycarbhouse 3.2m x 5.66m

16 Bounty Place, Palmerston North **Freephone: 0508 733 728** **Freefax: 0508 733 727**

www.redpath.co.nz

As 07.07.22

COMPONENT DRAWINGS (Not to scale)

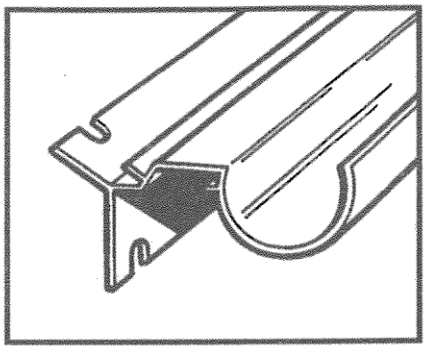

EAVES BAR/GUTTER

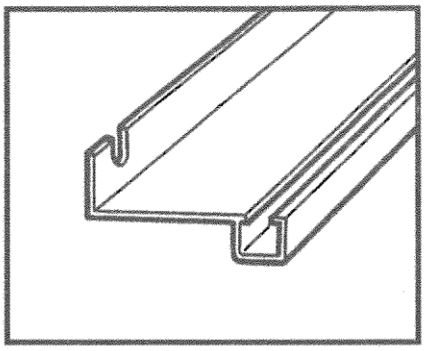

DOOR END CILL

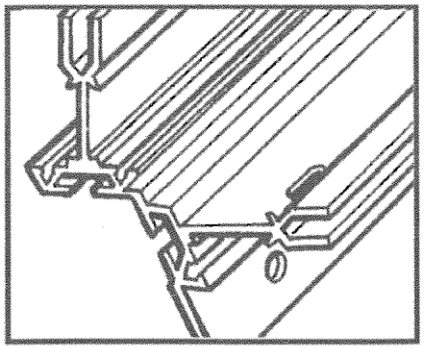

CORNER BAR

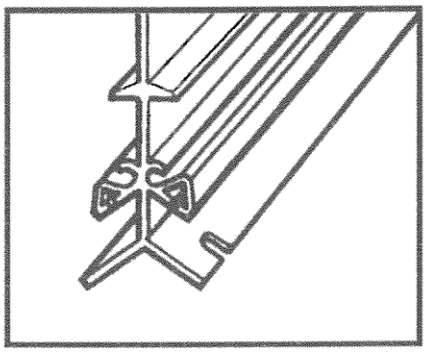

RIDGE

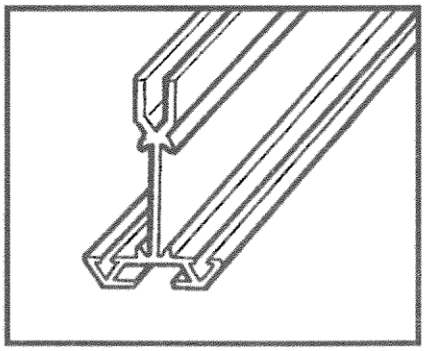

GLAZING BAR

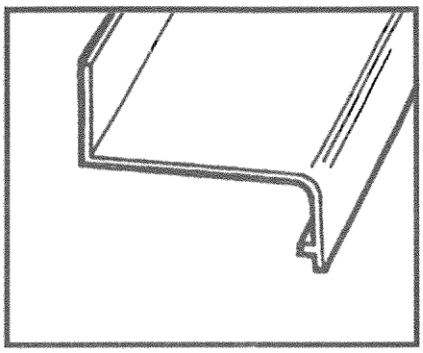

SIDE CILL

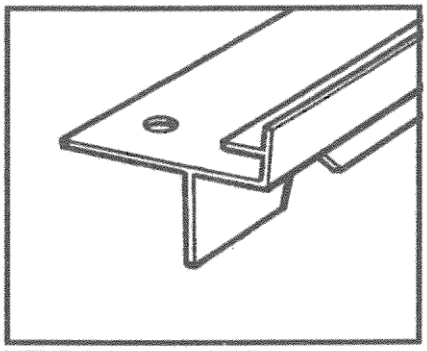

VENT BOTTOM RAIL

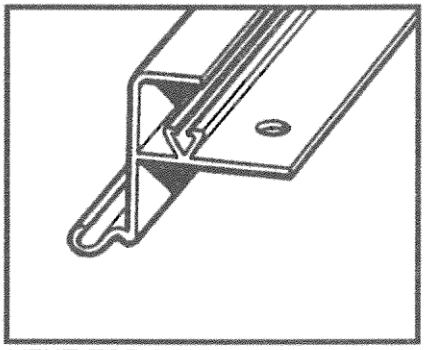

VENT TOP RAIL

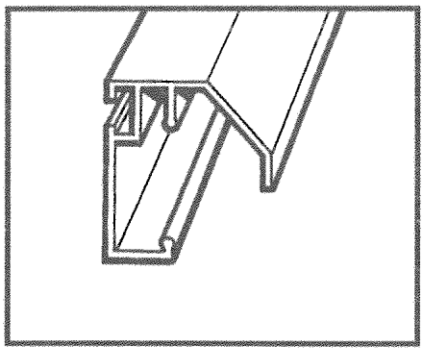

TOP DOOR TRACK

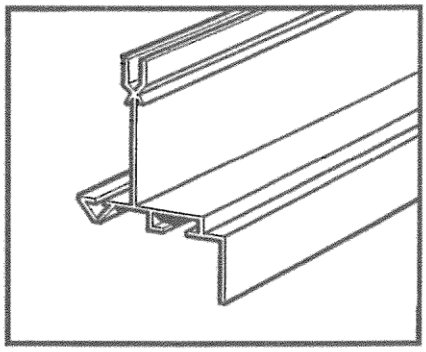

VENT SIDE RAIL

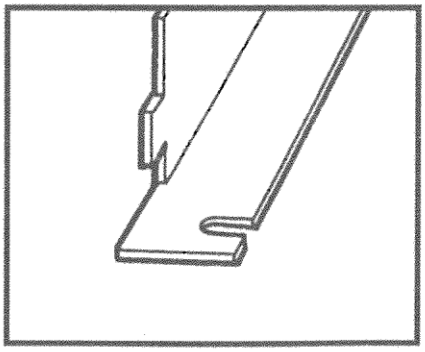

VENT SLAM BAR

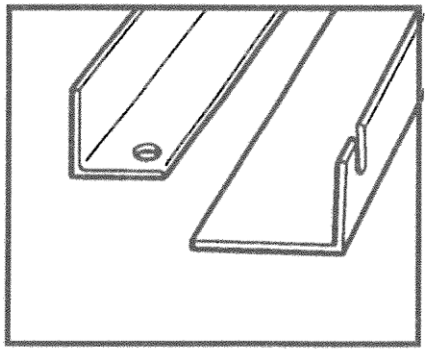

BRACING ANGLE

HORIZONTAL BRACING ANGLE

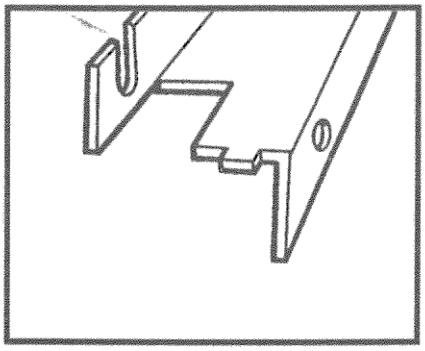

DOOR TRACK SUPPORT

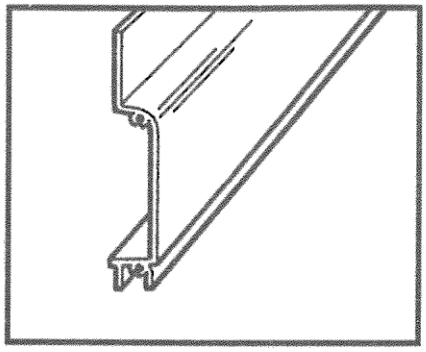

DOOR TOP/BOTTOM PANEL

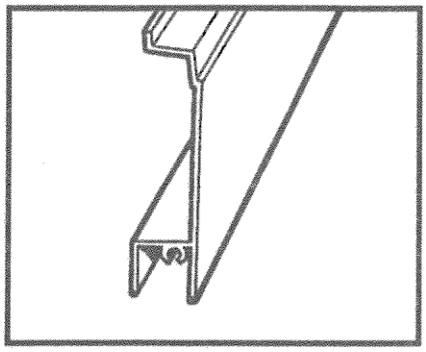

DOOR INFIL PANEL

FITTINGS WITHIN THE KIT (Not to scale)

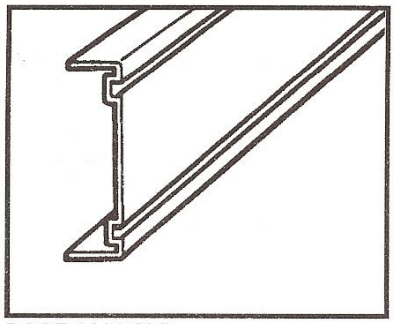

BASE (ALLOY)

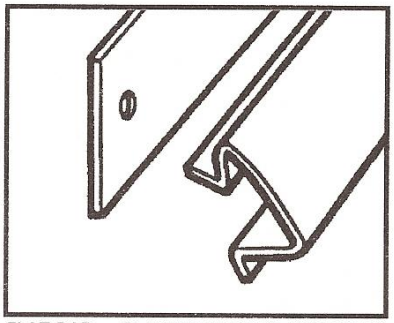

FLAT BAR GLAZING CAPPING (OPTIONAL)

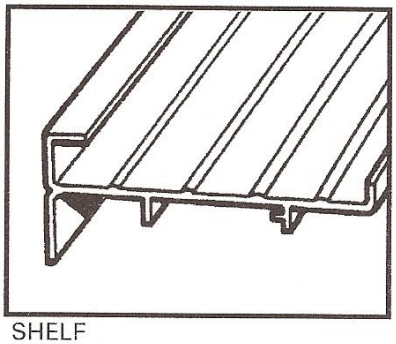

SHELF

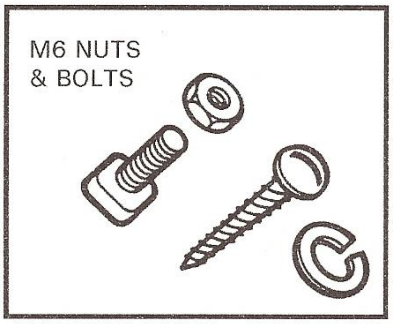

SELF TAPPING SCREWS SPRING WASHER

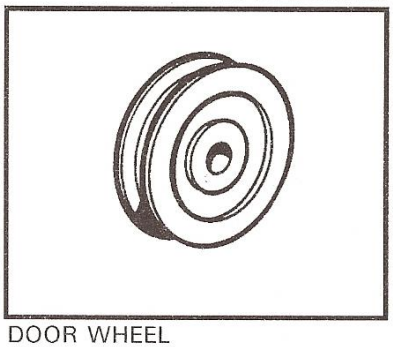

DOOR WHEEL

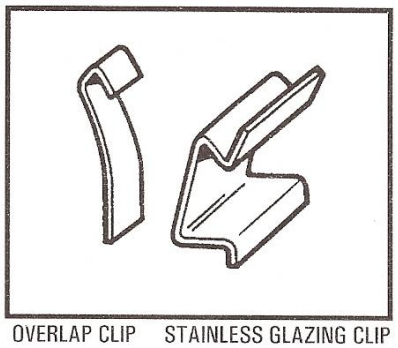

OVERLAP CLIP STAINLESS GLAZING CLIP

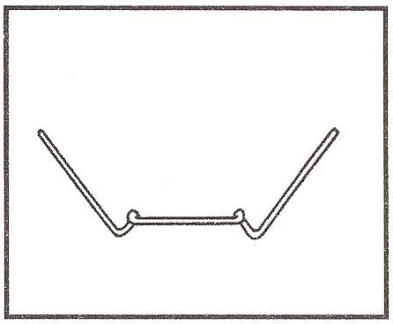

STAINLESS WIRE CLIP

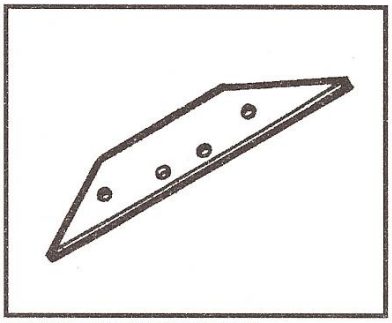

EAVE GUSSET PLATE

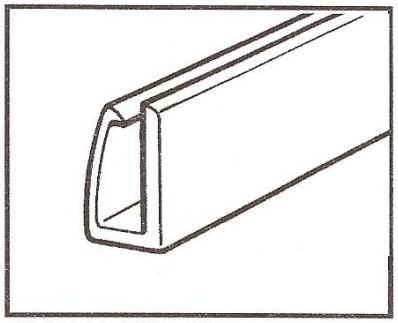

BLACK DOOR SKID

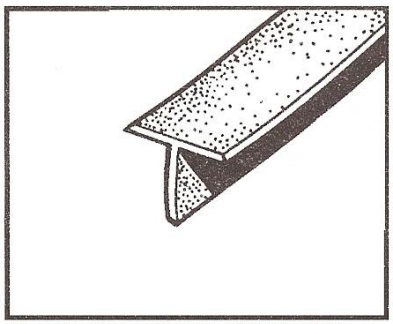

BLACK DRAUGHT EXCLUDER

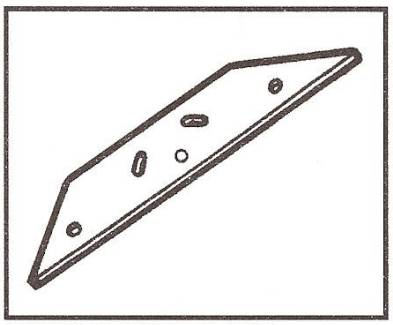

RIDGE GUSSET PLATE

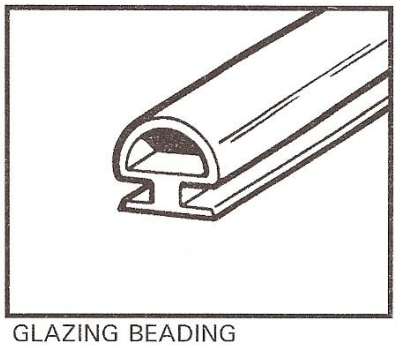

GLAZING BEADING

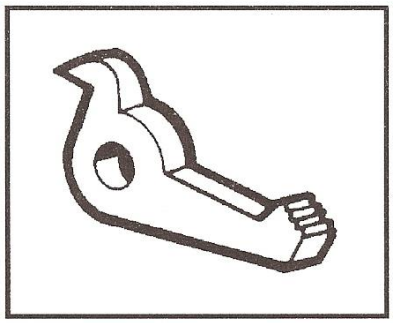

DOOR CATCH

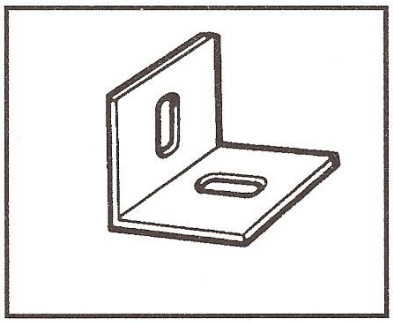

BASE ANGLE/SMALL
DOOR TRACK SUPPORT

BEWARE!

PARTS LIST – FOR THE BEAST SERIES POLYCARBHOUSE

			5.66m
1	Ridge		1
2	Gutter/Eave		2
3	Side cill		2
4	Side bracing angle		8
5	Alloy shelf 8' long		1
6	Rear end horizontal angle	Taped together	1
7	Rear end cill	and marked	1
8	Long rear end glazing bar	rear end	1
9	Medium rear end glazing bar		2
10	Shorter rear end glazing bar		2
11	Diagonal angles for rear end		2
12	Door end cill	Taped together	1
13	Medium door end glazing bar	and marked	2
14	**Shorter door end glazing bar**	**rear end**	2
15	**Short door end glazing bar**		1
16	Main door track support		1
17	Diagonal angles for door end		2
18	**Upper horizontal angles end**		2
19	**Lower horizontal angles end**		2
20	**Corner bar in 2 packs of 4**		8
21	Roof glazing bar		16
22	Long roof bracing angle		4
23	**Short roof bracing angle**		4
24	**Side glazing bar**		16
25	**Vent packs in roof**		4
26	**Vent packs for side**		2
27	Top door track		1
28	Door panels – Top panel - 2	Taped together and	2
	Bottom panel – 2	marked door	
	Intermediate panel – 3		
29	**Door post – handed left – 1**	**Taped together**	1
	Handed right – 1	**and marked**	
	Unhanded – 2	**door**	
	Angle – 1		
30	Tee bar cantilever		27
31	**Glazing beading**		685'
32	**Bag of fittings**		1
33	**Gusset plates, eave**		4
34	Gusset plates, ridge		2
35	Casement stay		4

REDPATH BEAST POLYCARBHOUSE BASE DIMENSIONS

(Materials not supplied)

Base material may be: Timber, Brick, Block, or Concrete
(Dimensions shown are to the exterior edges)

The dimensions given below are for the base & ground anchoring system of your Polycarbhouse. You will need to supply the materials & construct these using Concrete, Brick or Timber. Ensure that dimensions A & B are not exceeded! as these are precise outside measurements enabling the aluminum base cill of the polycarbhouse (supplied) to overhang the edges of your base. Also ensure that the base is square by measuring across the corners (C) in both directions. Only when this measurement is equal is the base square!

Check the level using a builder's spirit level – in directions (A), (B) & (C) The building & its Polycarbonates cladding relies on the buildings base being level in all directions. The height of the base is typically up to 150mm above ground level, with a portion of the base being below ground level. If using Timber for the base, the base will need to be secured to the ground with pegs spaced at a width & depth to suit your chosen sites wind exposure & ground conditions.

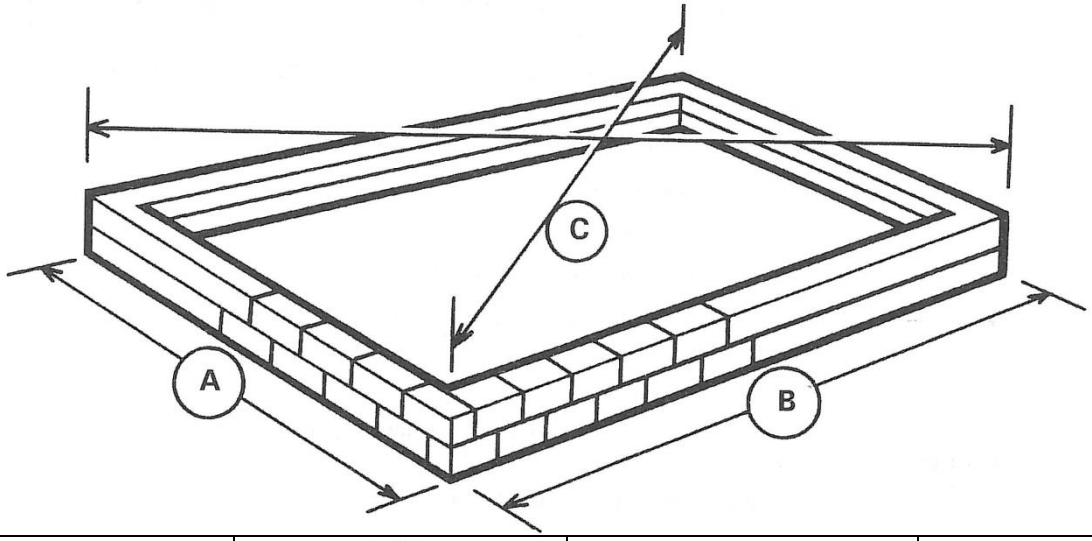

MODEL: Nominal frame size	**A** (actual base size width)	**B** (actual base size length)	**C** (actual diagonal – check)
BEAST 3.2m x 5.66m	3195mm	5666mm	6505mm

Note: Please check with your local council whether a building permit is required for your polycarbhouse before construction commences

HELPFUL HINTS & ADVICE

- Please take your time and be sure to read all instructions carefully before assembling. The polycarbhouse structure does often require at minimum an “experienced DIY” type person or a semi-skilled builder to assemble.
- Locate the polycarbhouse in a sheltered or semi-sheltered position. Polycarbonate is a fragile product and strong winds, or flying debris could potentially damage the Polycarbonate sheeting. Secure the roof vents in a closed position, close doors & windows if very windy. A shelter belt should be considered to protect the polycarbhouse and plants within in windy locations.
- Do not assemble the frame or attempt to glaze in windy, or damp conditions
- The polycarbhouse frame must be anchored to a permanent foundation / base. This will not only help secure it against strong winds, but will help prevent breakage of the Polycarbonates via ground movement. Materials for the base are optional & are not supplied as part of this kitset.
- When building your own timber/brick/concrete foundations/base ensure that they are level and square and built to the correct outside measurements otherwise your frame will not be correct and the Polycarbonates will not fit.
- Be sure all four corners of the constructed polycarbhouse are square before installing any Polycarbonates, and do not install the Polycarbonates until the polycarbhouse is secured onto a permanent foundation/base.
- Do not place your polycarbhouse in vulnerable locations such as under trees, near children’s playing areas, upon loose soils, in an open exposed place with open field or distant views.
- Be careful when using agricultural chemicals such as fertilizers, fungicides and insecticides etc. in the polycarbhouse. Do not use chemicals that are for outside use only. Always read the labels very carefully.
- Do not push or lean on the Polycarbonates panels. Do not lean weighty objects onto the Polycarbonates. Use extra care when moving heavy or awkward objects such as tables, poles, internal frames etc. within or near the polycarbhouse.
- Do not latch the door when anybody is inside the polycarbhouse. Do not occupy the polycarbhouse in times of high wind or poor weather (hail etc)
- Be aware of the increased temperature in the polycarbhouse on a sunny day & allow for shading, or extra ventilation for these higher temperatures.
- Do not keep pets or other animals in the polycarbhouse & try to prevent their entry.
- When cleaning Polycarbonates, do not exert too much pressure onto the Polycarbonates.
- Bolts may need greased to avoid binding.

DETAILED ASSEMBLY INSTRUCTIONS

The contents of this carton are divided into the different frame assemblies that collectively make up the complete unit.

It is recommended that each frame assembly is fully completed before moving on to the next.

The frames to be constructed are as follows:

1. SIDE FRAME – Two of.
2. REAR GABLE – One of.
3. DOOR GABLE – One of.
4. ROOF VENT – Four of.
5. DOOR – Two of at 457mm wide.
6. Additional parts such as the ridge, roof bars, eaves ties etc. are put on “loose” and are not pre-constructed into an independent frame.

SIDE FRAME ASSEMBLY

For the point of this plan we have used a 3.8m Model as an illustration.

From the main box you require: Pack of side bars marked “side bars”.
Pack of gutters, angles and cills marked “side”.

From the pack of fittings you need: Nuts and bolts + the Glazing beading.

You need for each frame: 1 gutter/eave, 1 cill, 2 diagonal angles and 5 side bars. Before assembling any of the side frame section you will need to slide the required number of bolts into the glazing bars. (See drawing). Assemble the side frames as shown.

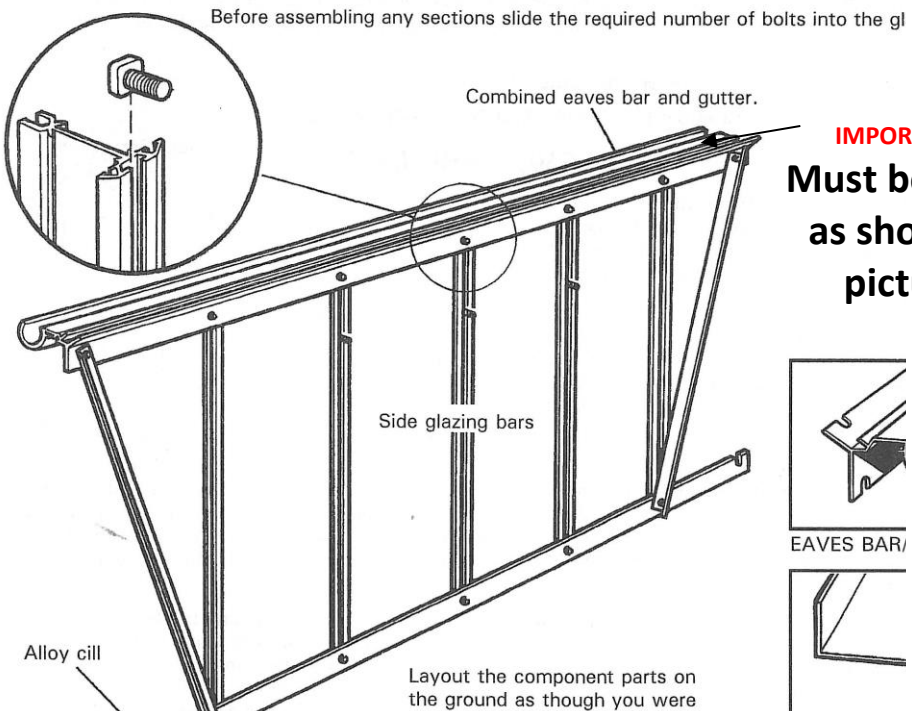

IMPORTANT!!

Must be fitted as shown in picture.

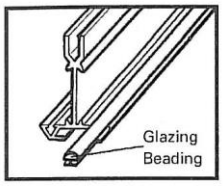

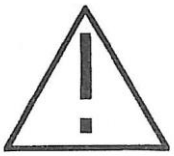

BEWARE OF SHARP EDGES!

1. Slide the glazing beading into each side bar taking care not to stretch the material. Trim off any surplus level with the ends of the glazing bar.
2. Lay the 9 components on the floor as though you were standing inside the polycarbhouse i.e. with the gutter and cill facing downwards and the bolt slot of the glazing bar upwards. (Key point)
3. Slide 3 bolts into each glazing bar, the middle bolt will be used later to attach the cantilever tee bars. Fix the combined eaves and gutter bars to the glazing bars by pushing the bolt previously inserted through the holes in the lower flange of the eave and secure with a nut. Ensure that the glazing bar is pushed up under the gutter and is tight up against the inside shoulder of the eave. (Key Point). Do the same with the rest of the glazing bars.
4. Fix the cill in a similar way to 3 above but start with the middle glazing bars and work outwards.
5. The 2 outer glazing bars have the angle ties bolted to them. Before attaching the nuts, place the tie bar over the bolts so that they point outwards towards the end of the eaves bar. They must be arranged so that the inside of the angle, in each case faces towards the middle of the house.

   N.B. there are 4 per side: the extra braces are centrally positioned (diagonally like the 2 end ones) for additional strength.
6. Ensure that the glazing bars are tight up against the cill and inside shoulder of the eave, tighten all nuts. The nuts and bolts are aluminum and only require one turn with the spanner after first finger tip tightening. (Key Point).
7. Do exactly the same with the other side frame.

WELL DONE! YOU HAVE SUCCESSFULLY COMPLETED THE 2 SIDE FRAMES!

REAR WALL END ASSEMBLY

For the construction of this frame you require from the main box:

- 1 pack of corner bars marked “corner bars”
- 1 rear end pack marked “rear end”
- 1 rear end cill marked “rear end”
- 1 rear end horizontal brace marked “rear end”.

From the pack of fittings you need:

- nuts and bolts
- glazing beading and gusset plates – 1 large (ridge plate) and 2 small (eave plates).

These plates are not in the pack of fittings but are taped up with the casement stays elsewhere in the box.

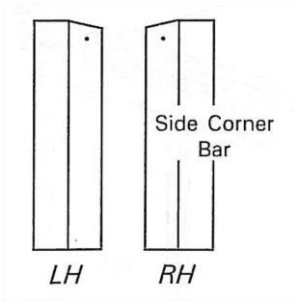

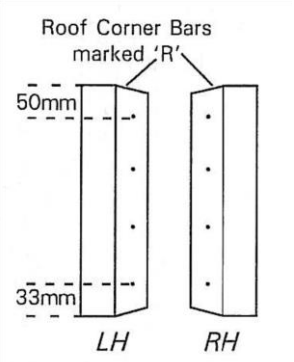

1. Starting with the pack of corner bars split the tape holding them together and first identifies the 2 roof bars from the 2 sidebars. The sidebars have one hole and one mitre, both at one end. The other end has no hole and is square cut. The roof bars have 4 holes in the flange and are mitred at both ends and in addition have a letter “R” written at the apex on the outside of the bar. N.B. If your greenhouse is a painted one, the roof corner bars will not be marked with a letter “R”. They can be identified from the sidebars as outlined above. (Key Point)

   The bars are also handed so you must identify the left and right hand. Standing up; hold one side bar vertically in your left hand; the other in your right. Rotate the bars so that the 2 bolt slots are facing in towards you, with the mitres at the top (inside view). Viewed this way the 2 mitres should run down to each other. The roof bars can be handed similarly, keeping the bolt slots facing inwards and the letter “R” to the top. (With a painted model, the top can be identified by observing the 4 holes in the flange. The two holes nearest the end are at 50mm and 33mm centres. The 50mm end is the top i.e. nearest the ridge) On the outside you can identify them by ensuring that the “R”s (indicating ridge) are at the top, the mitres will then run into each other.
2. Slide the glazing beading into the 4 vertical glazing bars and the 4 corner bars, taking care not to stretch the material. Trim off any surplus level with the end of the bars. N.B. The corner bars have 3 grooves to receive the glazing bead; do not put any in the middle one. (Key point).
3. Lay out the components of the frame on the ground as though you were standing on the inside i.e. with the bolt slots uppermost. Ensure that, having correctly identified the roof from the side corner bars, left and right hands (see previous text) you have the roof bars with the letter “R” (indicating ridge) at the top on the outside, i.e. towards the ground. (Key Point)
4. Slide 2 bolts into each corner bar bolt slots (facing inwards) 1 at the top and 1 at the bottom. Put a nut on and lightly tighten, leaving them approx. 50mm from the end of each bar. These will be used later in the general assembly.
5. Starting at the apex (2 corner bars opposite each other marked “R”) slide 1 bolt into the other bolt slot i.e. the one that is facing upwards and is set at 90° to the other – 4 above. (Key Point)

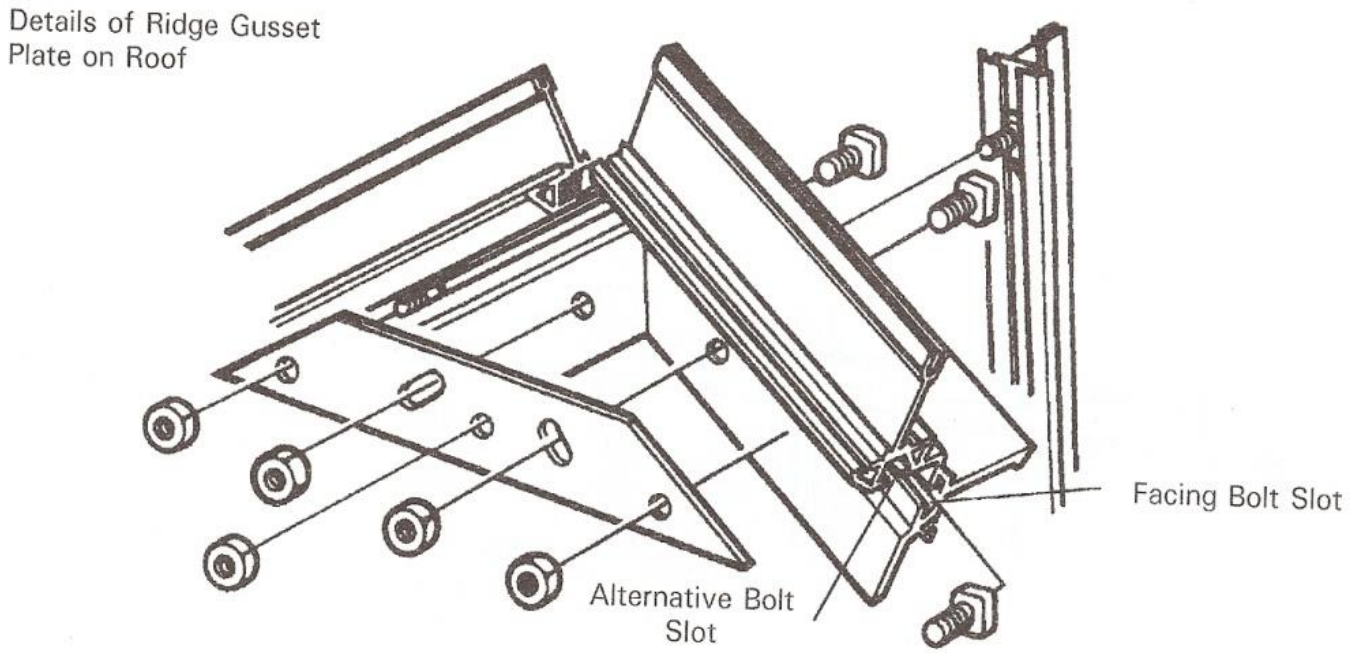

GR = GLAZING RUBBER

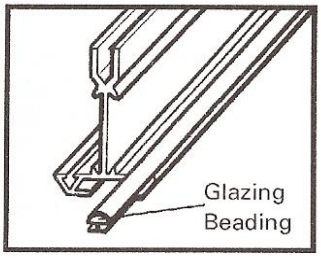

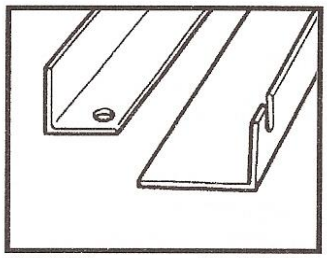

BRACING ANGLE

HORIZONTAL BRACING ANGLE

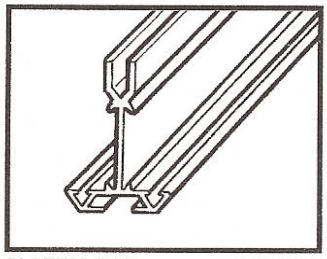

GLAZING BAR

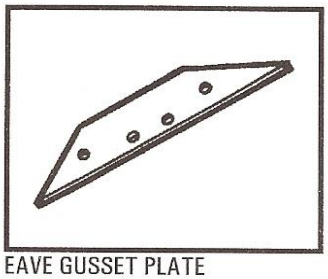

EAVE GUSSET PLATE

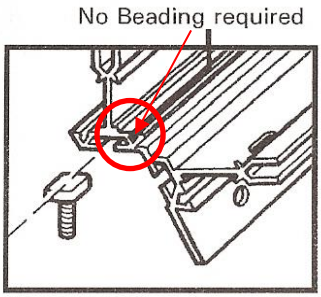

CORNER BAR

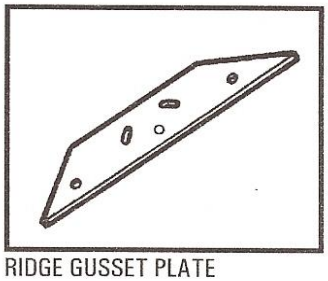

RIDGE GUSSET PLATE

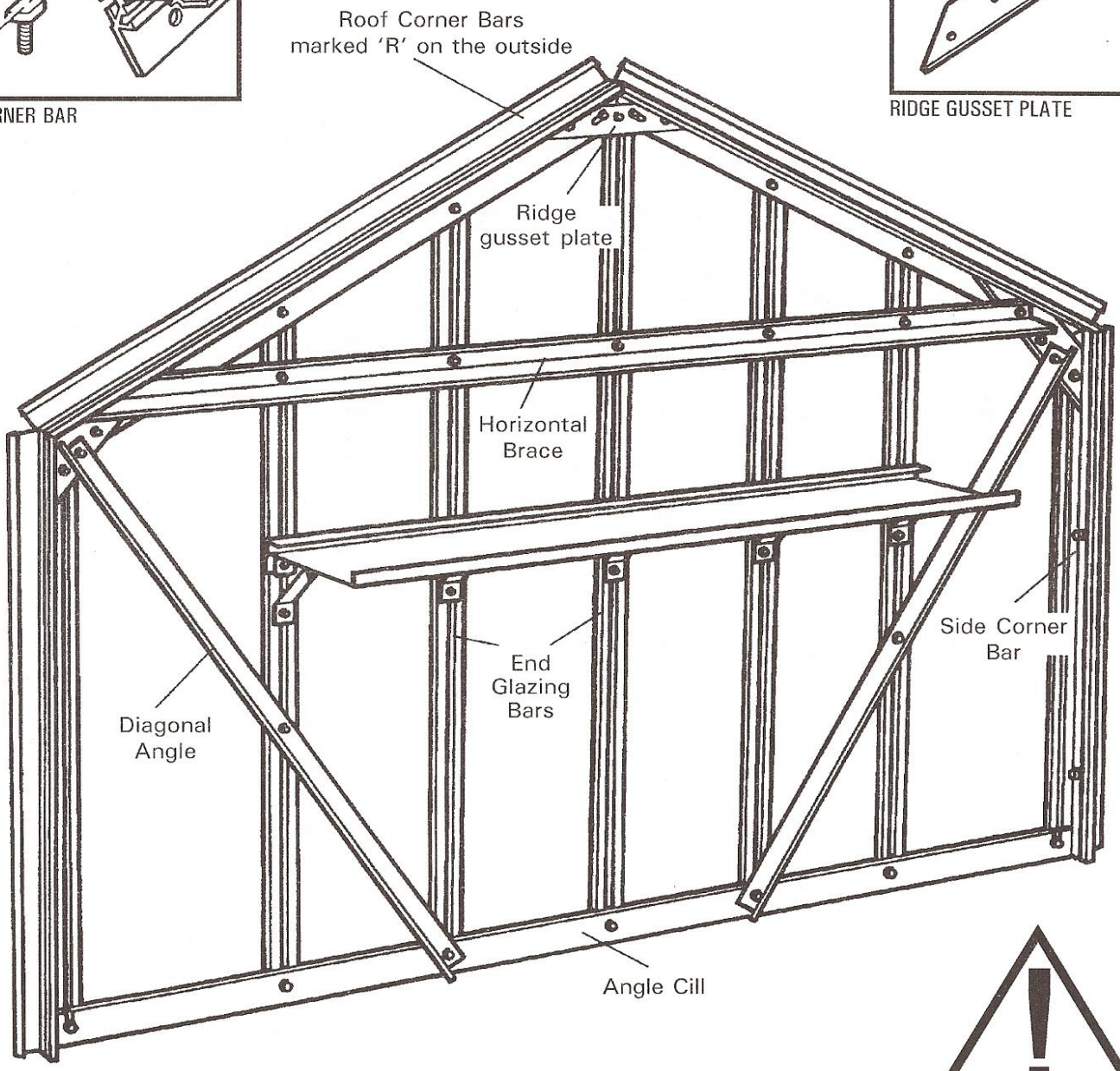

BEWARE OF SHARP EDGES!

SHELF INSTALLATION

The next addition. The following diagram and text give details of its installation. The following diagram and text give details of its installation

The shelf can be fitted to the rear end of the unit or to either side wall.

This is done by utilizing the previously inserted nuts and bolts in the glazing bar, wall bar and side corner bar.

1. Attach the fixing braces on to all bars using the lower of the unoccupied nuts and bolts at the desires height. (Ensure that all braces are fixed at the same height.)

2. The shelf rests on the upper of the unoccupied bolts (nuts now not required), which is held in place using the fixing clamps as seen in the diagram. Again, ensure that the fixing clamps are fixed at the same height.

3. The shelf is further supported by the insertion of the fixing brace in to the protruding lip of the underside of the shelf as seen on the diagram.

4. Ensure that all nuts are tight. Do not over tighten.

5. Shelf installation is now complete.

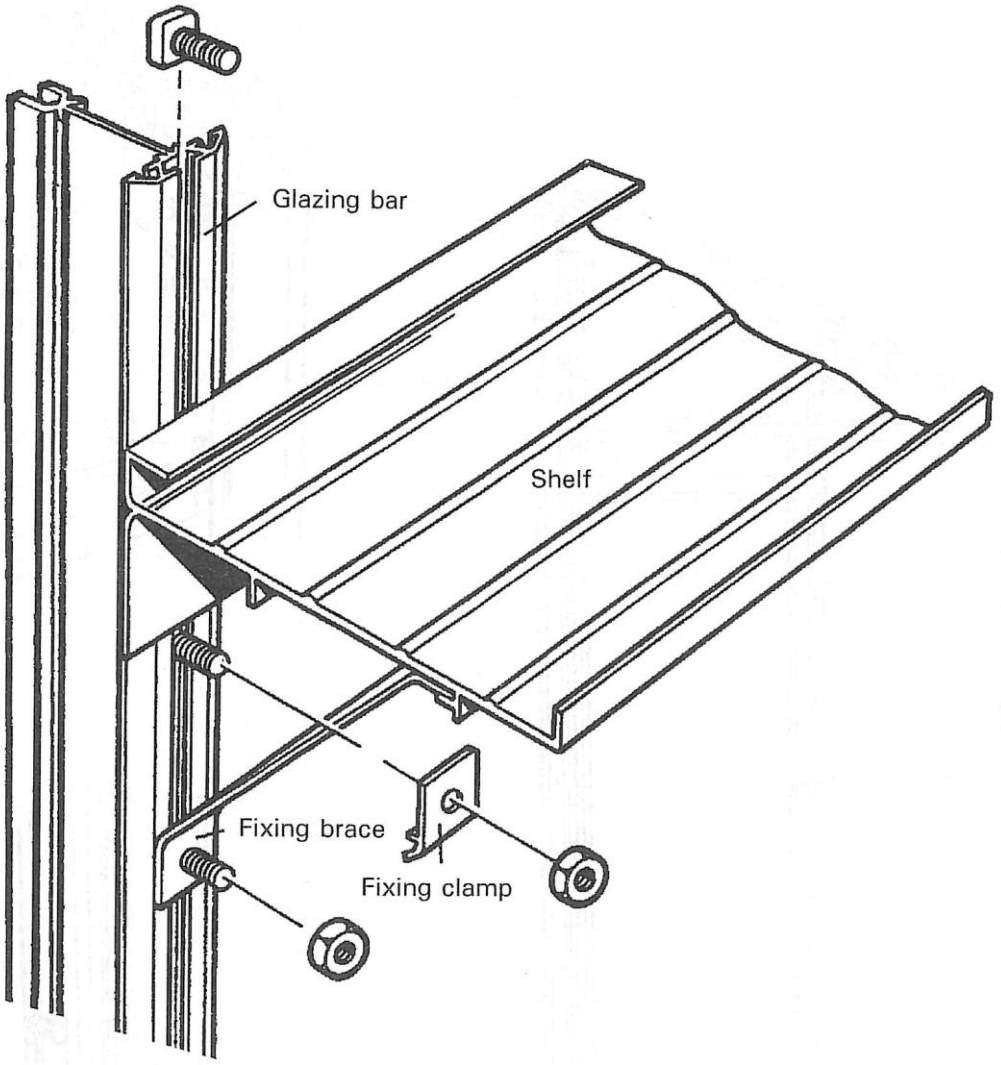

6. Place the Ridge gusset plate (larger of the 2 types) over the bolt, slide the plate left or right until the slotted hole in the plate lines up with the locating hole in the flange nearest to the end of the corner bar. Put nuts on both bolts i.e. flange and plate, fingertip tighten only. (**Key point**)
7. Do exactly the same with the other roof corner bar ensuring that the two bars are pressed tight up together behind the Ridge gusset plate.
8. Now moving to the eave gusset assembly, slide one bolt into the other bolt slot (the one that is facing upwards and is at 90° to 4 above). Place the eave gusset plate (smaller of the 2 types) onto the bolt and move it left or right until the next hole in the plate lines up with the locating hole in the top on the side corner bar. Place a bolt through the hole and put a nut on fingertip tight only. (Key point). At this stage do not put a nut on the first bolt.
9. Do the same with the other part of the same eave gusset plate, ensuring that both corner bars are tight up against each other behind the eave plate.
10. Repeat steps 8 and 9 at the other corner with another eave gusset plate.
11. Attach the bottom cill, marked "rear end" in the box, to the left and right hand side corner bars by inserting a bolt into the facing bolt slot. Line the bolts up with the 2 slotted holes at the end of the cill, put nuts on and tighten up ensuring that the corner bars are pushing right down into the angle of the cill. (Key Point).
12. You can now attach the 4 vertical glazing bars to the bottom cill in a similar manner to 11 above, the two longer bars to the middle holes, and the shorter ones to the outer holes. Before attaching the nuts to the longer bars place the diagonal angles onto the bottom bolt and put a nut on fingertip tight only. Attach the other end of the angle brace to the bottom bolt of the eave gusset plate, put on the nut and fingertip tighten. (Key Point). Do the same with the other diagonal brace.
13. Moving to the top of the greenhouse, insert 3 bolts into the shorter two glazing bars and 2 bolts into the longer two glazing bars.
14. Now you can attach the long angle horizontal brace marked "rear end" in the box to the top bolts of the eave gusset plates. The angle should be facing upwards, put the nuts on and fingertip tighten.

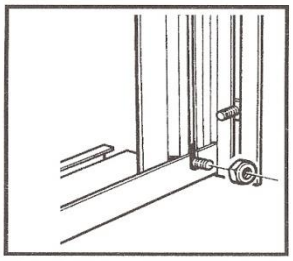

BOTTOM CILL/CORNER BAR

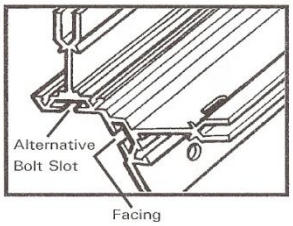

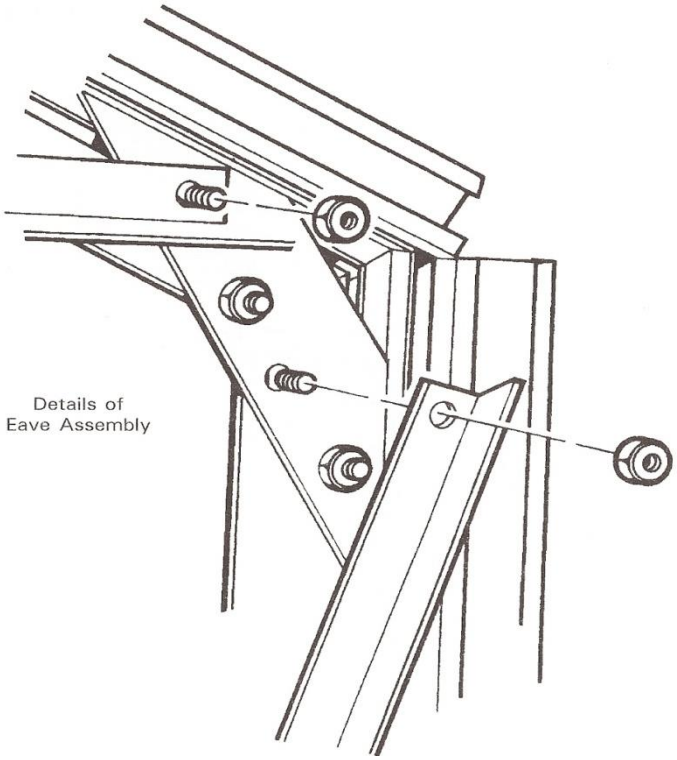

15. You can now attach the 4 vertical glazing bars to the roof/corner bars. Slide the last bolt in each bar you inserted in 13 above to the end of each bar and insert them through the holes in the flange of the roof corner bar, place the nuts on and finger tip tighten.
16. Attach the diagonal angles to the 2 shorter glazing bars. Slide the second bolt previously inserted in 13 above to the middle of the bare and line it up with the hole in the diagonal brace, put the nuts on finger tip tight. (Key Point)
17. Now attach the horizontal brace to the 4 upright glazing bars utilizing the final bolts you inserted in 13 above. Put the nuts on finger tip tight. (Key Point).
18. The rear end is now almost complete. Before tightening all nuts check the corners to ensure they are tightly up against each other and that all the vertical bars are tight up against the angle of the rear end cill and corner bars. Tighten all nuts, the rear end if now complete

DOUBLE DOOR END ASSEMBLY

For the construction of this frame you require from the box:
1 pack of corner bars – marked “corner bars”
1 door end pack – marked “door end”

From the main bag of fittings, you need: nuts and bolts, glazing beading and gusset plates – 1 large (ridge plate), 2 small (eave plates)

The door end contains the cill and main door track support.
The apex gusset plate has a 5th hole in to accommodate a short glazing bar above the door.
The horizontal and diagonal Angle braces are a little thicker and are made from unequal angle.

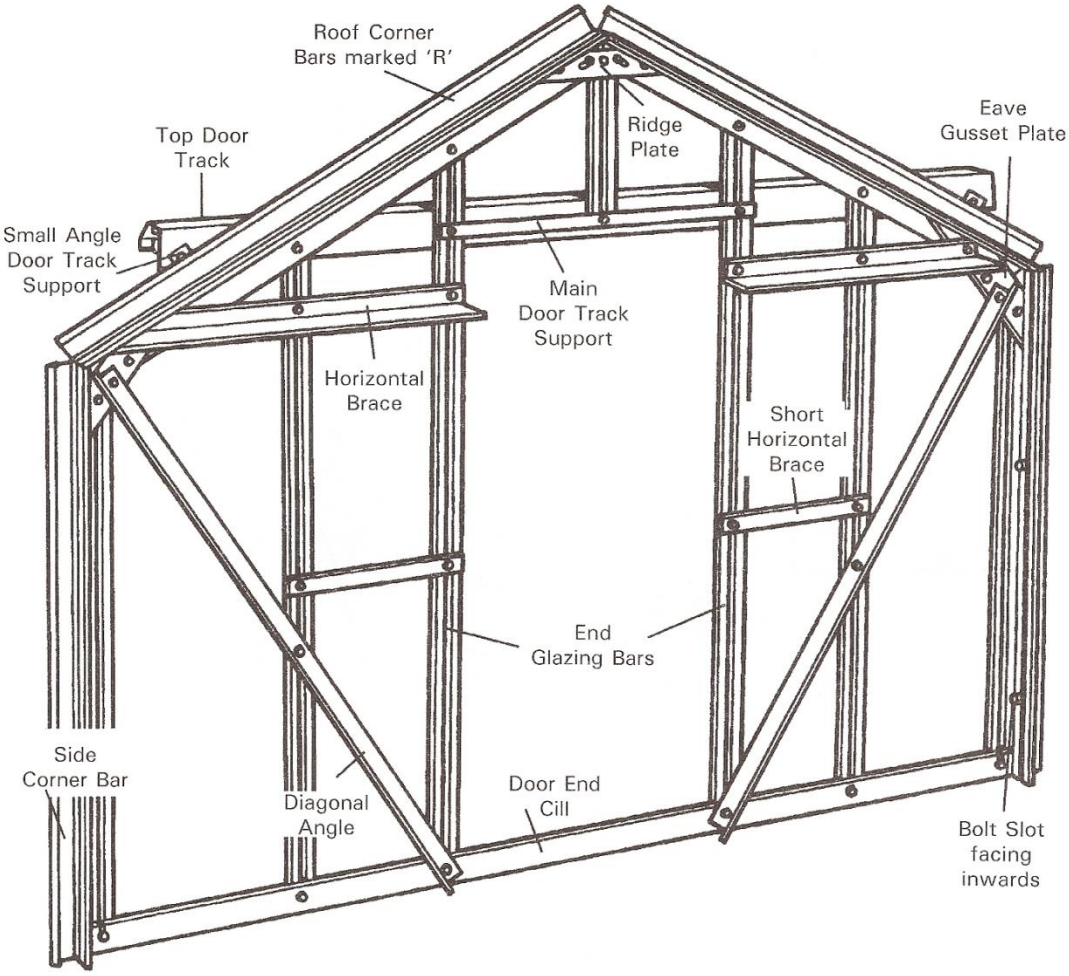

PROCEDURE
The format of the door end is identical to the rear end assembly up to and including step 13 so please refer to those items in the previous pages.

1. For step 14. Slide 4 extra bolts into each vertical glazing bar.
2. The long horizontal brace is replaced by 2 shorter ones that attach to the upper bolt of the gusset plate but stop at the longer middle bars to facilitate the doorway.
3. There are 2 additional short horizontal braces that attach to the 2 shorter vertical glazing bars at a point immediately above where the diagonal angle bolts to the bar, then to the longer intermediate bars horizontally along which thus ensures the doorway remains well braced and perpendicular.
4. The **main door track** support can now be fitted at a point half way between the horizontal angle and the corner bar. It is important to note that the 2 slotted holes at the extremes of this section are facing **upwards** and not **downwards. (Key point).** Do not fit the top door track or the short glazing bar above the door opening at this stage
5. Check that all joints are tight and all braces are in position, and then tighten up all nuts. The end is now complete.

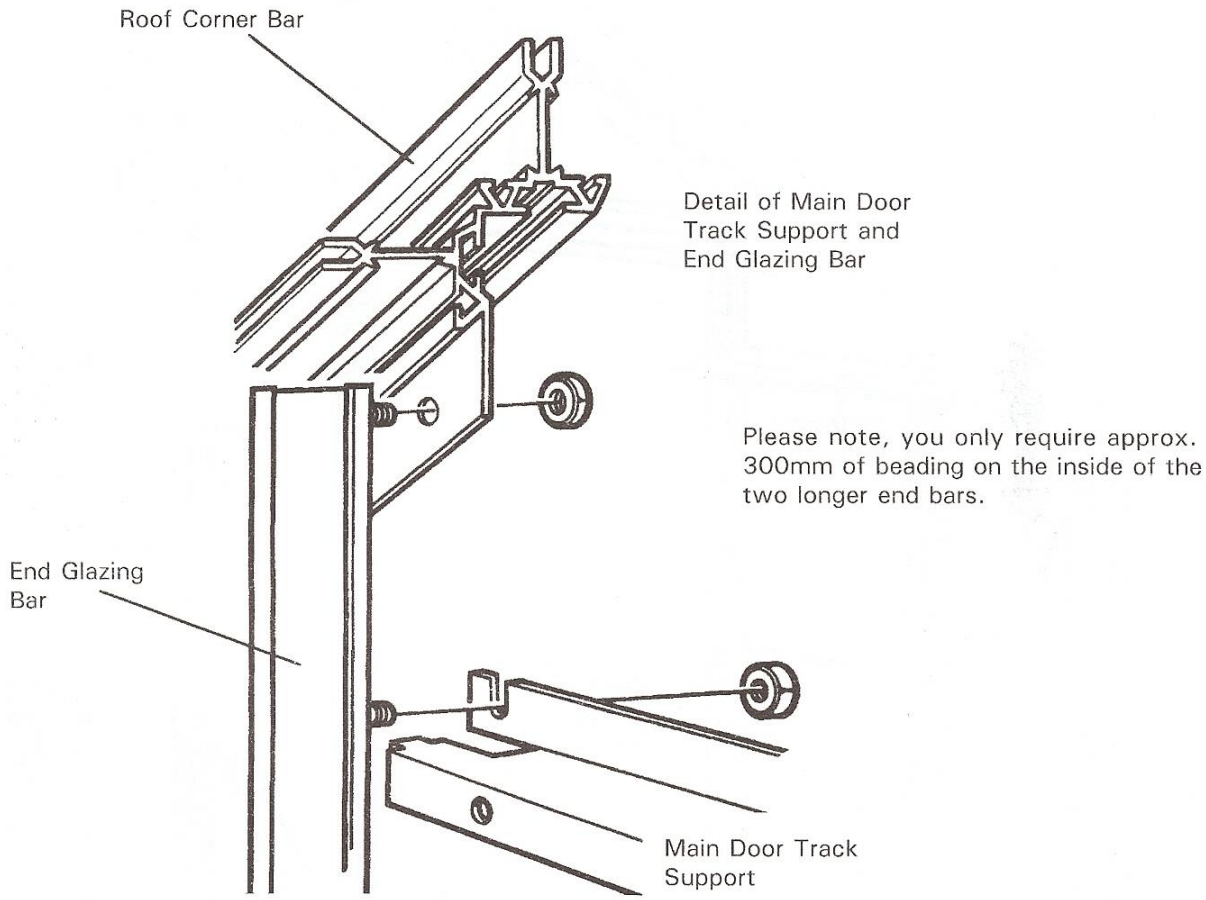

You have now completed the 4 main frames of the structure which can now be joined together. You need not do this procedure on the base but any flat surface near the greenhouse site. If your base is prepared however, you can carry put the assembly there to save lifting it on later. **But before this we construct the vents and doors**
You have now completed the main frames of the structure, which can now be joined together. You need not do this procedure on the base but any flat surface near the polycarbhouse site. If your base is prepared however, you can carry out the assembly there to save lifting it on later. But before this we construct the vents and doors.

ROOF VENT ASSEMBLY

The roof vent pack has 5 pieces of aluminium: and from the main box of fittings you require 6' of glazing beading, 4 nuts and bolts, 2 casement stay pins, 1 casement stay and 6 M4 stainless steel nuts and bolts.

PROCEDURE:

1. Identify the slam bar and attach the 2 stay pins to the outer side of the angle using the M4 stainless steel nuts and bolts.
2. Lay the 4 edge pieces of the vent on a level surface as though you were on the inside of the vent (with the bolt slots of the sidebars uppermost and the 'v' slots of the bottom rail uppermost. The top rail is arranged in such a way that the squared off end is to the bottom and the hooked hinge uppermost).
3. Slide the glazing beading into the slots in the side and top rails and trim to suit.
4. Insert a bolt into each end of the side rail bolt slots, put these bolts through the holes in the top and bottom rails, add nuts and lightly tighten. Check that all joints are secure and that the vent is square, and then tighten up the nuts.
5. Fit the casement stay using the M4 stainless steel nuts and bolts, putting the bolts through the holes in the saddle of the stay and through the 2 elongated holes in the bottom rail. Hold the nuts in place and tighten the bolts with a screwdriver.

Do the same with the other vents.

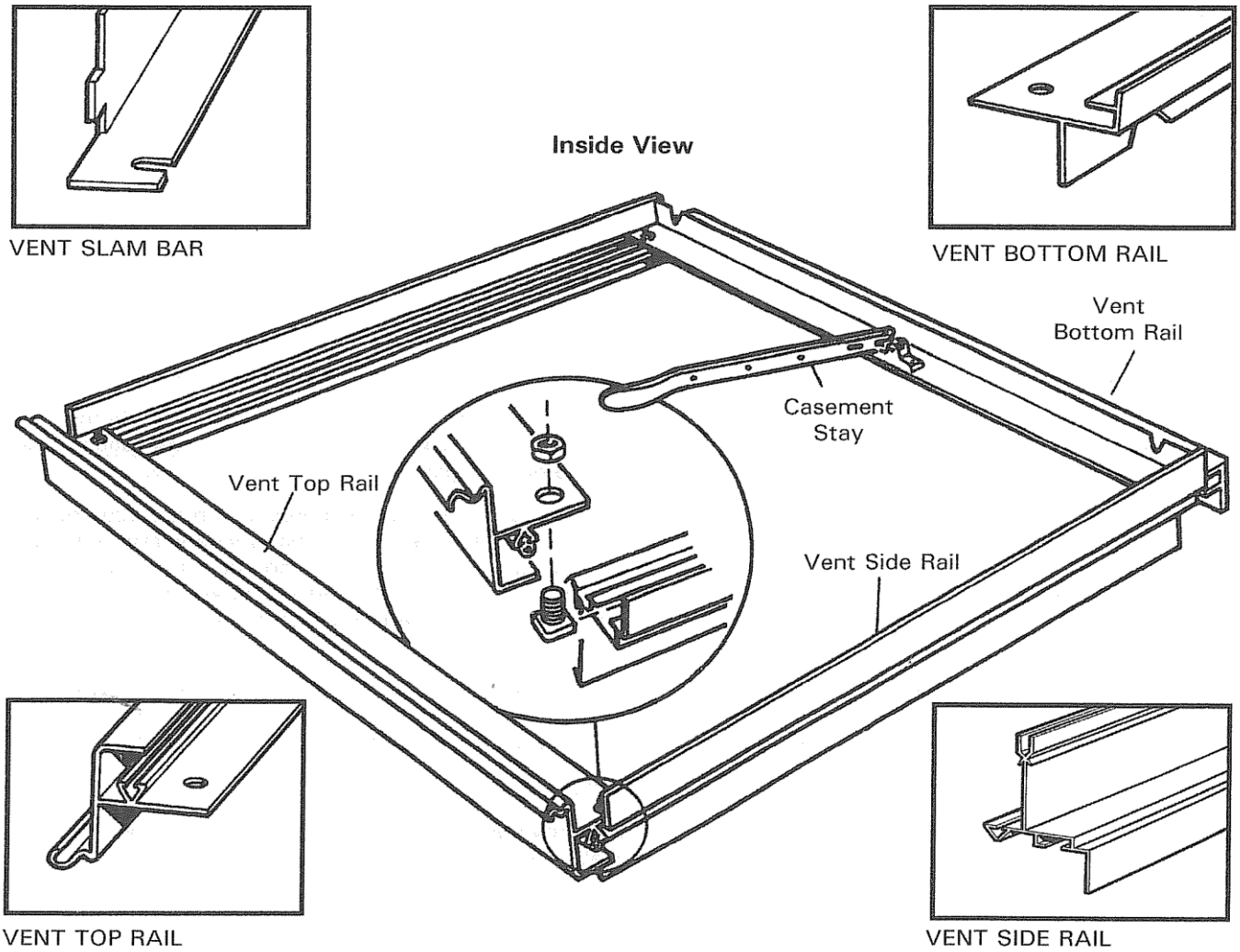

The vents can be positioned onto the ridge after general assembly by sliding them along the ridge from the end and locating them to the desired position.

Do not fit the vent at this stage.

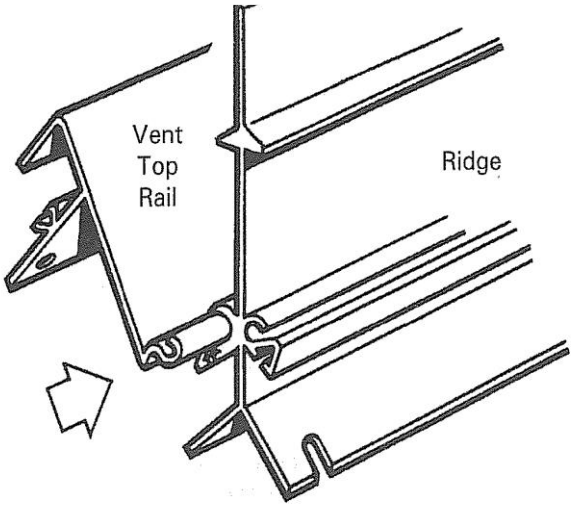

DOOR FRAME ASSEMBLY

Components for each consist of:

- 2 door-glazing bars (1x handed, 1x unhanded)
- 3 infill panels
- 2 top & bottom door panels

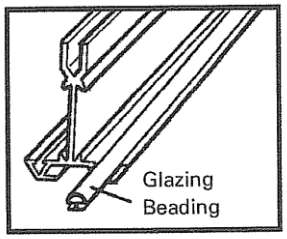

From the main bag of fittings you require

- 2 door wheels
- 2 clip on nylon door skids
- 2 lengths of black rubber draught excluder
- Self-tapping screws and spring washers
- Glazing Beading

1. Place the two sidebars on a level surface roughly two feet apart with the bolt slots facing downwards. The top of each sidepiece has two screw holes in it and the bottom has three. (**Key Point**)
2. Place the top, bottom and 3 infill panels in position as shown by the position of the screw holes in the sidepieces and the panels. The top panel has the greenhouse name on it. The bottom panel has the edge for the door skids to fit on. The lower infill panel locks on to the bottom panel.
3. Fix the door together by screwing through the door sidepieces into the holes provided in the edge of the panels with the No. 8 half-inch self-tapping screws. DO NOT fix the top left hand side screw yet. The screw will go in more easily and without danger of trying to go crooked if you can put a small amount of grease on the screw before assembling the doors. Alternatively, you could insert the screws into the screw eyes of the door panels before assembling the door; this would have the effect of pre-self tapping the panels prior to assembly, making assembly easier.
4. Fix the top left hand side with the one-and-a-half inch screw provided. Put the screw through the door catch so that the serrated part is facing outwards and upwards. Next slip two spring washers on to the screw, and then fix the screw through the side of the door and into the top panel. (Key point).
5. Make sure all angles are square and tighten all screws.
6. Fix each door wheel into position by pushing the bolt provided through the centre of the wheel and then through the hole in the top door panel from underneath (i.e. from the inside of the door) Put the washer over the bolt and secure with the nut provided, tighten until there is not movement on the bolt. The nuts are lock nuts and are harder to put on than normal nuts in general assembly. The wheel will revolve freely because it has ball bearings in it.
7. Slip the nylon door skids on each end of the bottom panel.

DOOR FRAME ASSEMBLY CONT

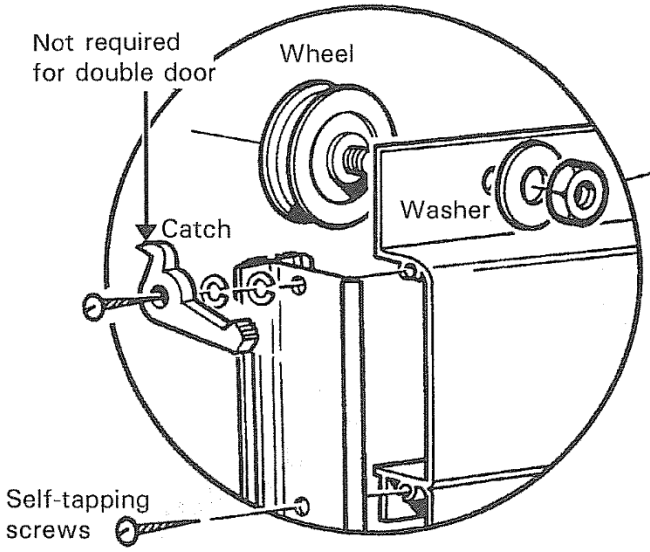

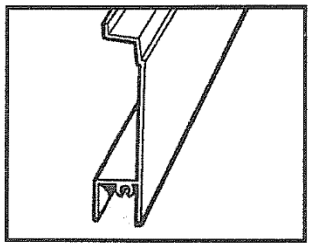

DOOR INFILL PANEL

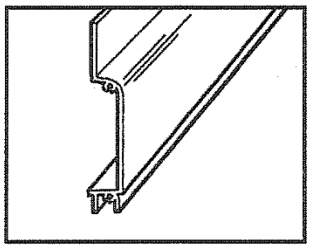

DOOR TOP/BOTTOM PANEL

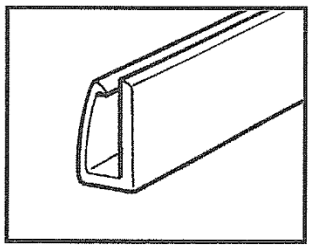

BLACK DOOR SKID

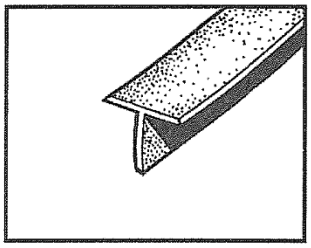

BLACK DRAUGHT EXCLUDER

The black draught excluder 1750mm long and will require trimming to length.
The interlocking infill panel and the infill panel are identical.

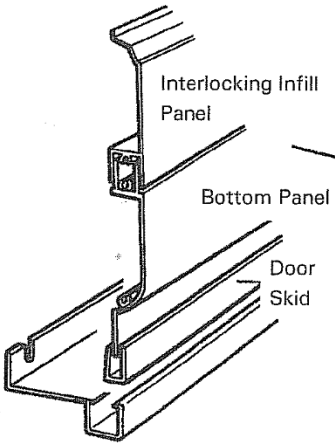

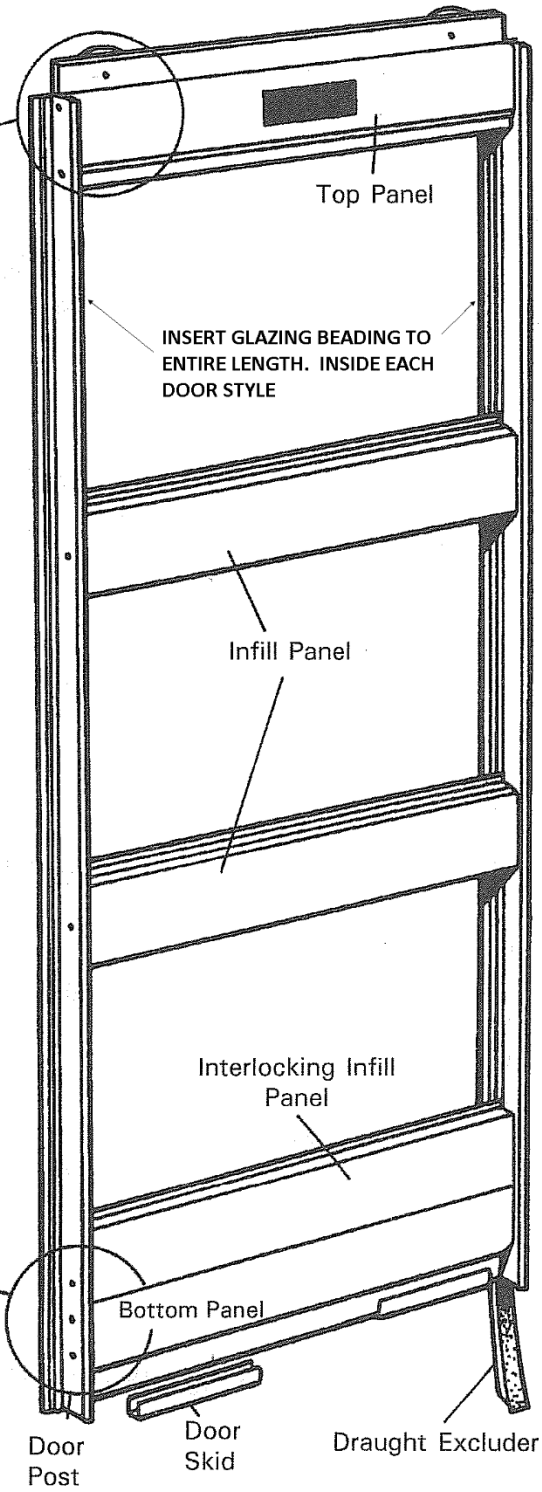

8. Turn the door over and insert the black rubber draught excluders in the groove (bolt slot) in each sidepiece of the door. Push up to the top of the door and trim off surplus at the bottom. With pair of pliers squeeze the groove together at the bottom so that the rubber will not slip down when the door is in its upright position.
9. Do not fit the door to the gable at this stage – wait until the structure is fully assembled prior to glazing.

DOOR FRAME ASSEMBLY CONT

If you have a double door option you will need to assemble 2 doors of 457mm width. The doors are assembled in the same way as the single door with the exception of the doorposts that meet in the middle – these are handed.

Looking at the door posts in profile with the 2 holes at the top (3 holes at the bottom) the open box part of the section goes to the outside

i.e.: on right hand door – left hand upright or on left hand door – right hand upright

The door catches are attached to the upper outer screws (left hand door – top left, right hand door – top right).

Having assembled both doors you need to attach a piece of alloy angle to the rear of one of the handed doorposts. Insert bolts into the bolt slot of one of the handed doorposts, attach the angle and put on and tighten the nuts.

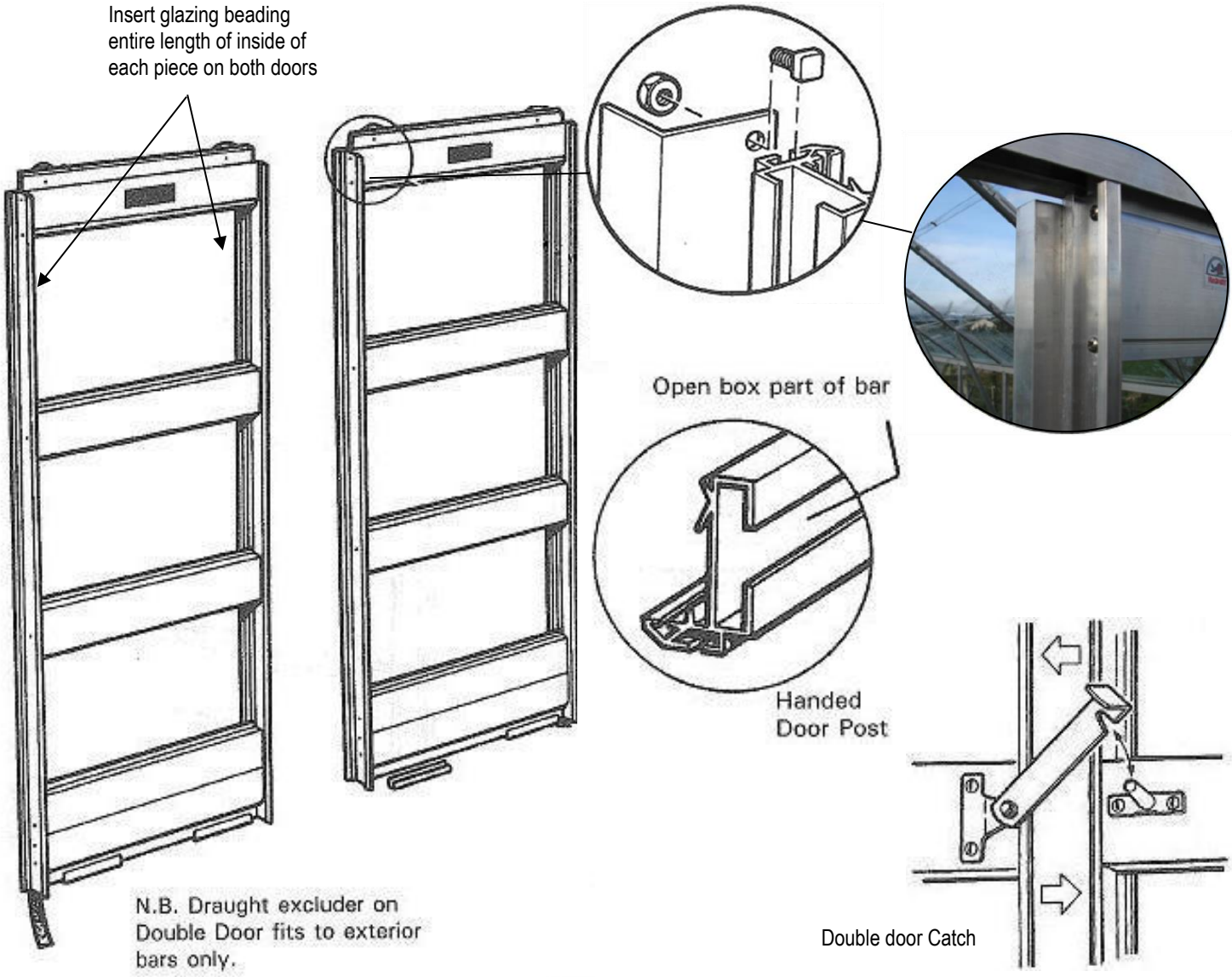

ASSEMBLY OF THE GREENHOUSE UNIT

PROCEDURE:

1. With the help of a willing assistant, stand up the rear gable and one of the sides. Standing on the inside of the structure with the gutter facing away from you, insert the eave/gutter bar into the gap between the corner bars, so that the inside flanges which form the angle of the roof and side line up with the bolt slots in the corner bars. (Key Point).

2. Undo the nuts holding the 2 bolts you inserted in the corner bars and slide them into the slotted holes in the flanges. Put a nut on the top bolt, put the side diagonal brace on the bottom bolt and then the nut and tighten up.

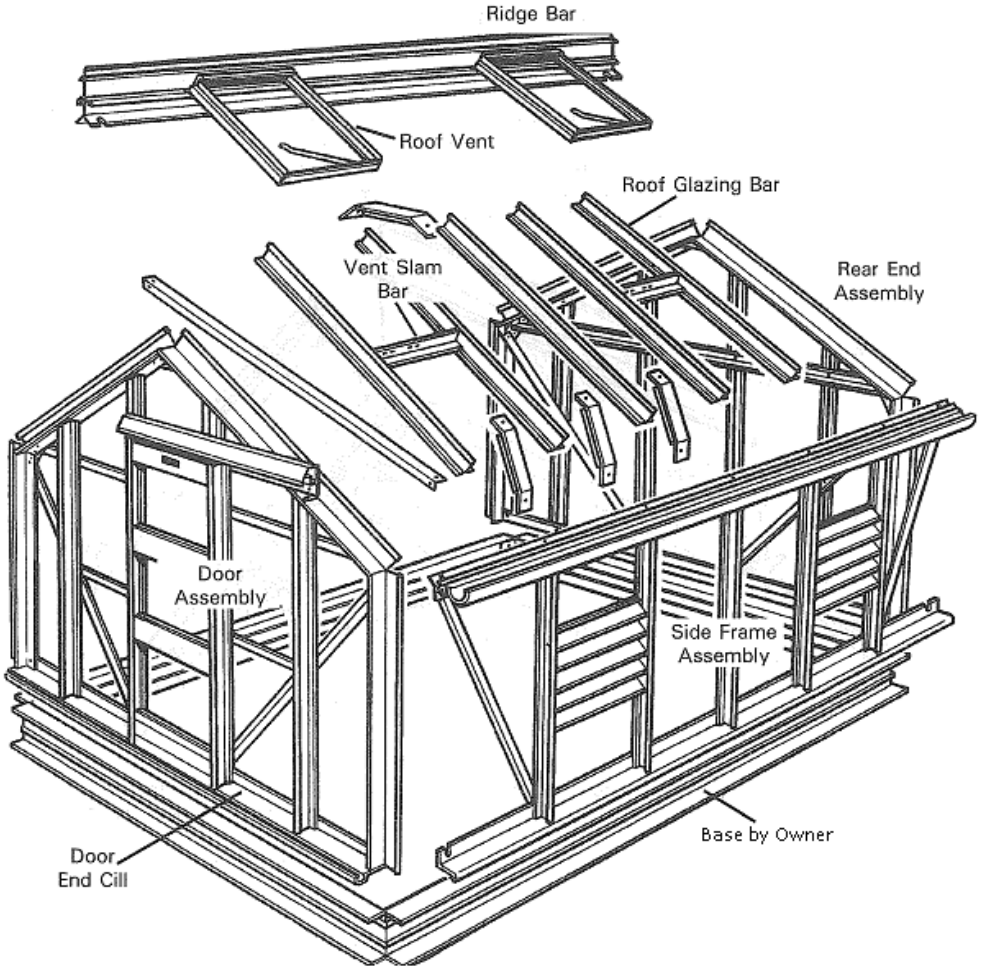

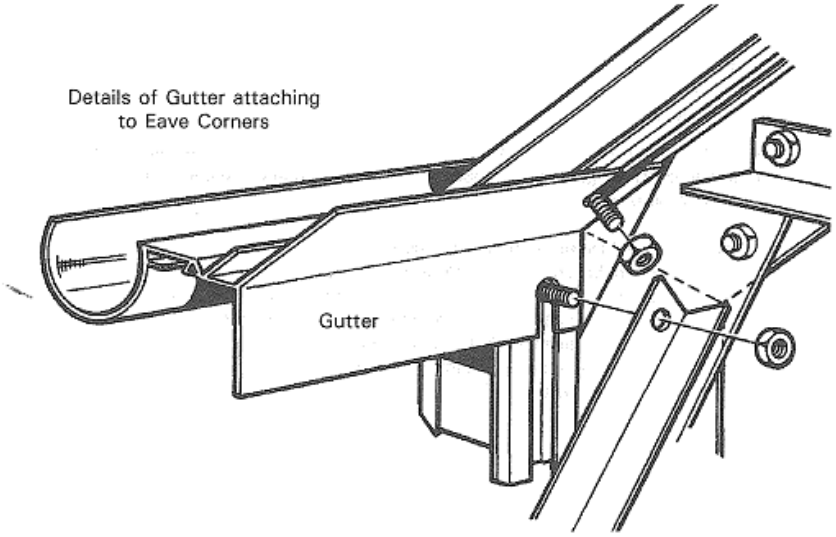

3. Now stand up the door end assembly (double or single door end are attached in the same way) and repeat the above procedure.
4. Stand up the other side frame and repeat the operation outlined in 1 and 2 above at both corners.
5. The bottom cill of the sides attaches to the corner bars in a similar way. Undo the nuts and bolts inserted in the gable end assembly, move the cill under the corner bar so that the elongated hole in the vertical flange of the side cill lines up with the bolt slot in the corner bar. Move the bolts down the slot into the slotted hole, put a nut on and tighten up, ensuring that the corner bar is pushed right down into the angle of the cill. Do the same at the other 3 bottom corners.

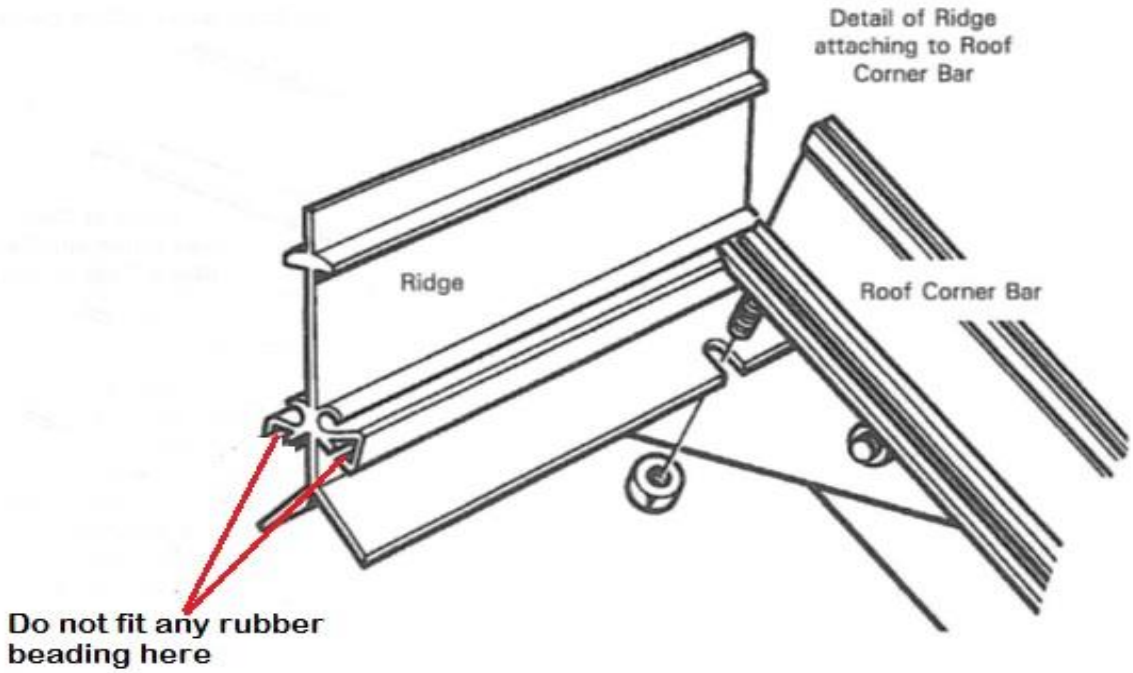

The ridge bar is fitted next, (Do not install any beading along the ridge. This is because extra space is required for the top edge of the 6mm thick Polycarbonate when you come to slide up the roof sheeting

Key Point). Lift the ridge bar up to the apex and standing on a pair of sturdy and safely placed stepladders push the ridge into the small gap between the roof corners so that the 2 flanges which form the angle of roof are tight up against the inside edge of the corner bars. The vertical part of the ridge is outside and pointing skywards. Undo the nuts and bolts previously inserted during gable end assembly and push them upwards into the slotted holes of the ridge. Tighten the nuts.

6. The roof bars can now be attached to the structure but first you must slide the glazing beading into the bars and trim to suit. (Key Point).

   Attach the bars firstly at the ridge, sliding a bolt into the bolt slot of the roof bars and placing the bolt through the holes in the flanges of the ridge. Put a nut on and immediately prior to tightening ensure that the roof bar is pushed up hard against the ridge. Do not attach the bottom of the bars to the eave until all the roof bars are bolted to the ridge. (Key Point)

8. Now attach the bottom of the roof bars to the eave/gutter bar into the holes in the upper flange. Start with the middle bars either side of the ridge. You will need to insert extra bolts into each bar that has a vent opening and a cantilever tee-bar brace.

   The 6.3m has 15 Large tee-bar braces – 5 each side and 5 in the roof.

   You must remember to insert one extra bolt per cantilever T-bar brace and one per vent per bar. In addition one extra bolt would be needed on the bar next to the middle where you require the vent to go. If you have purchased a partition with your greenhouse you will be 2 roof bars short of a full pack. Omit one each side of the ridge at the point where the partition is to be situated i.e. at the same place where you omitted the side glazing bars.

   Before tightening the nuts that hold the roof bar to the eave you must ensure that the roof bar is tight up against the small flange immediately above the gutter. (Key point) Failure to observe this point and the previous one of keeping the roof bar tight up to the ridge could result in a slight outward bow of the gutters and a slight downward dip of the ridge.

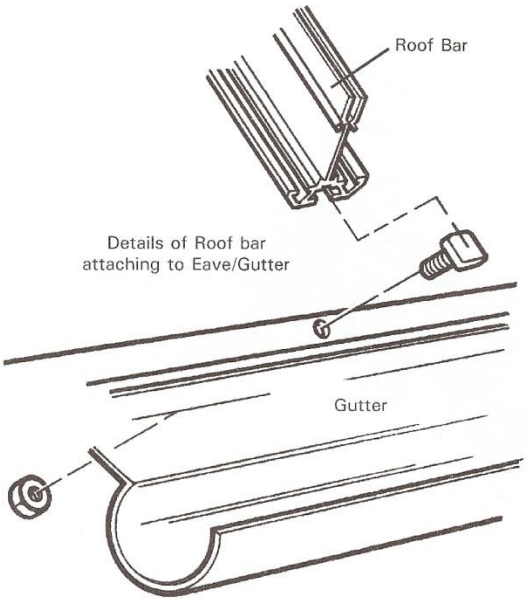

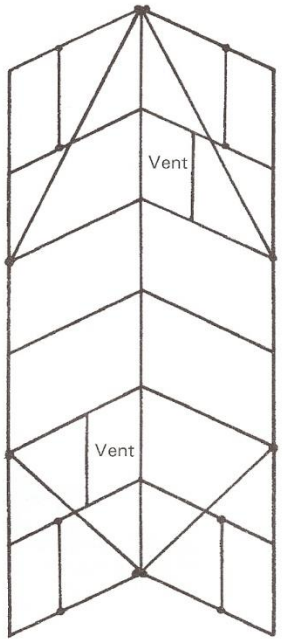

Plan of Roof
Bars & Bracing Angle
(note 10 below)

9. At this point you will need to lift the structure onto a firm footing or the greenhouse base if you haven't already done so.
10. There are 4 diagonal roof braces. You attach these to the point where the ridge bolts to the corner bars at the rear end. The angle travels diagonally down to the first glazing bar at the eave/gutter. You fit one each side at the rear of the greenhouse.
11. You can now attach the T-bar cantilevers, which bolt to the sidebars and roof as indicated in point 8.

    Before tightening these cantilevers up make sure there is no sag in the ridge or outward bow in the eave. (Key point) If you do have this problem you must straighten it out before tightening the cantilevers up. A bow or sag can easily be removed with 2 people pushing the gutters towards each other until straight, hold it in position whilst a third person tightens up the cantilevers.

The main structure is now complete and it must be lifted onto its base for securing down.

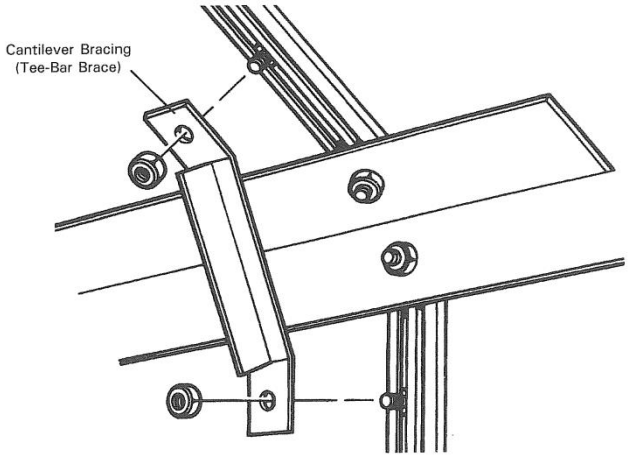

5 BLADE LOUVRE

LOUVRE MODEL CONTAINS

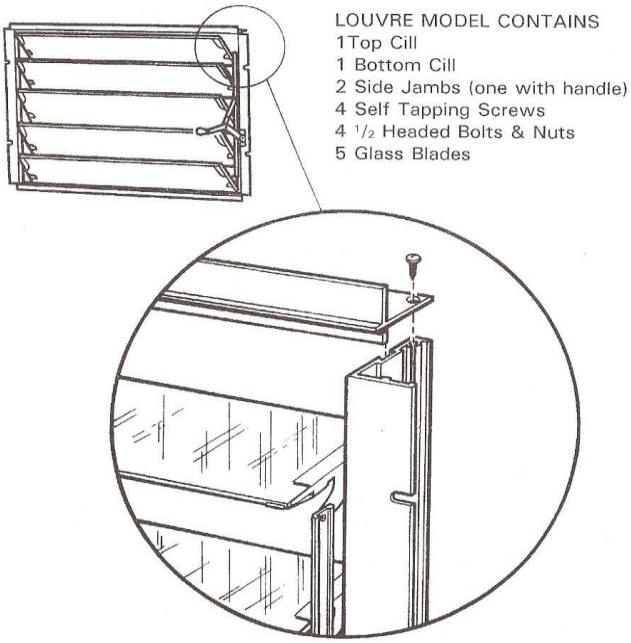

PROCEDURE

1. Place top cill into position on side jamb of louvre and secure with self tapping screws.
2. Do same on the other top corner.
3. Do same with bottom cill.
4. Please note that the handle is on the right hand side, the above diagrams are viewed from the inside.
5. To fit the louvre to the side, utilise the extra bolts you inserted during side frame assembly. Insert a Polycarbonates pane 610 x 457 ref B at the bottom, bolt the louvre to the framework and slide it down so that the bottom cill of the louvre frame is touching the pane of Polycarbonates. With the louvre in the open position, insert 5 Polycarbonates blades from the inside. Insert the upper pane above the louvre.

SECURING GREENHOUSE TO BASE

BRICK BASE, TIMBER OR CONCRETE

Having built your base level and square and to the outside measurements given on page 4, sit the greenhouse onto the base. The 4 cills will lip over the edge of the base and will protrude approx. 7mm all the way round.

Drill through the cill and into the timber/brickwork; screw through the hole using a treated screw and washer. Create an anchor point every 610mm i.e. at each glazing bar.

Angle Brackets

The aluminium angle brackets are bolted to the cill and then with the use of screws are secured to the base.
Timber screws are available on request.

EXTERIOR DOUBLE DOOR TRACK

Align end of door track with door in fully closed position.

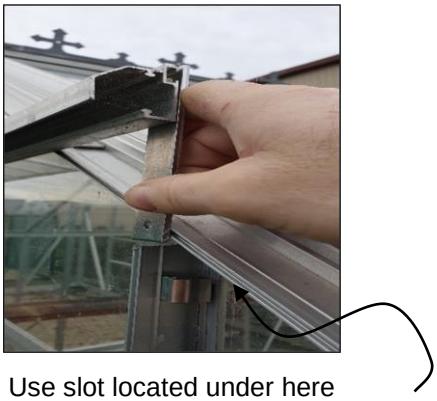

Use slot located under here

This fits in exactly the same way as the single door track and is “fine-tuned” accordingly. However, it has a small angle bracket on the left hand roof corner bar as well as the right corner bar.

The small glazing bar above the **MIDDLE** of the door can now be fitted. Put the glazing beading into the grooves and trim to suit. Insert 2 bolts into the bar and put them through the holes in the top door track and apex gusset plate. Put nuts on and tighten up.

NOW YOU CAN FIT THE VENT TO THE RIDGE

Before sliding the vent into the ridge, slide a piece of black tube into the vent hinge socket. Slide the vent into position, insert a small self-tapping screw into the tube approximately ½ way along, then tighten the screw. The tube will expand and lock into position thus preventing sideways movement of the vent. N.B. There is no hole for the screw but it will easily push into the tube and screw up. (**Key point**)

You only require one tube per vent on the left hand side of the vent socket (viewed from inside the greenhouse).

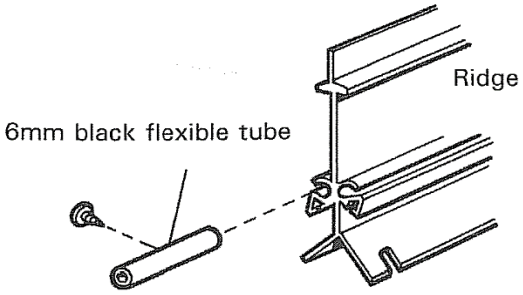

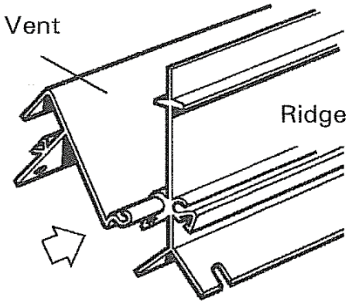

Having slid the vents form the end of the ridge to the desired position, you can now fit the “slam bars” to the 2 glazing bars.

Utilise the bolts you inserted during general assembly and position the “slam bars” just under the vent allowing the casement stay to effectively close.

The slam bar can be adjusted later to facilitate good opening and closing of the vent.

FITTING THE DOOR TO THE STRUCTURE

The door slides on to the frame from the left hand side.

Put the door bottom rail into the bottom door track and slide to the right, feed the first wheel into the upper door track and move further to the right until the black draught excluder butts up to the end glazing bars.

Carefully ease the door past the glazing bar and feed in the second wheel. Push further to the right until both draught excluders are butting up to both end-glazing bars.

Carefully ease the door past the two glazing bars. The door will now run quite freely. To square up the door with the spacing, undo the upper bolts holding the door track. There is a little play to facilitate “fine tuning” of the door.

N.B. sometimes the door can be a little stiff prior to glazing but once the Polycarbonates has been inserted (the last job of the construction) the extra weight will make for smooth running. (**Key Point**)

GLAZING THE STRUCTURE

PLEASE NOTE: DIAGRAMS BELOW SOME MODELS MAY BE SUPPLIED WITH OPTION 1 AND/OR OPTION 2

Always handle Polycarbonates with extreme care as failure to do so can result in injury.

There is a choice of glazing:

1) 3mm horticulture in standard panes.
2) 4mm horticulture in standard panes.
3) 4mm horticulture in larger panes.

Check that you have not installed any rubber beading along the ridge. This is because extra space is required for the top edge of the 6mm thick Polycarbonate when you come to slide up the roof sheeting

Installing the aluminium foil tape to the top edges of the Polycarbonate cladding. And installing the 20mm square strongbacks and double sided tape

Aluminium silver tape is supplied for the top edges of all Polycarbonate sheets to seal these off. Apply a strip of the aluminium tape along the top edge of all sheets and fold it over to prevent water ingress. The bottom edge of sheets are not sealed so that allow water to drain away that might collect

20mm square Aluminium Strongbacks are supplied with this Polycarbonate greenhouse to strengthen the Polycarbonate sheeting (assist in preventing it from bowing) and to give improved performance in windy conditions.

You will need to fit a 75mm piece of the white double sides 3mm thick foam tape to each end of each strongback.

The strongbacks are positioned as shown in the below pictures and the drawing on the follow page (red lines). You can place them in position by using the double sided tape at their ends to adhere them initially into place. Then use the stainless steel PK screw and washer to retain and push the stongback to the frame and cladding.

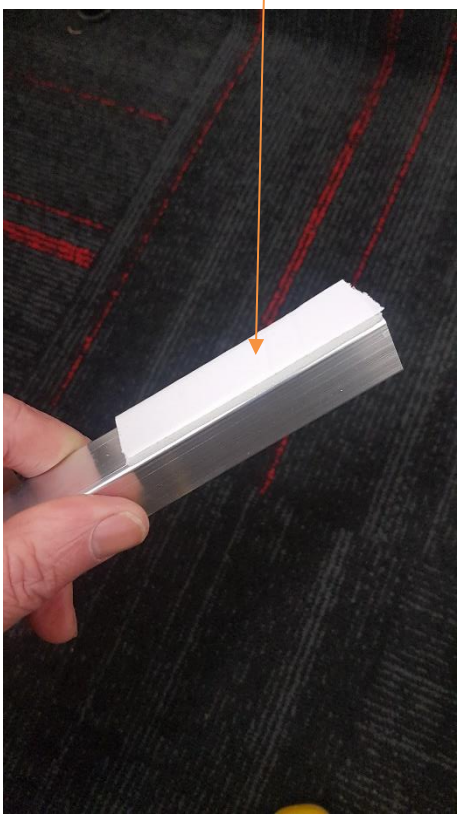

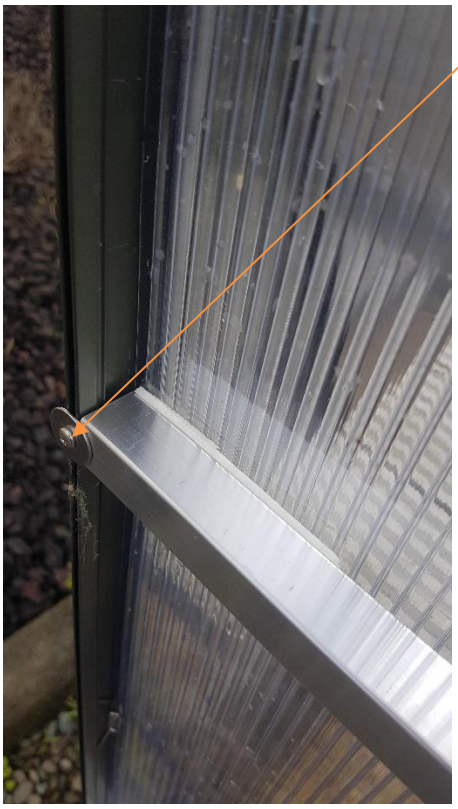

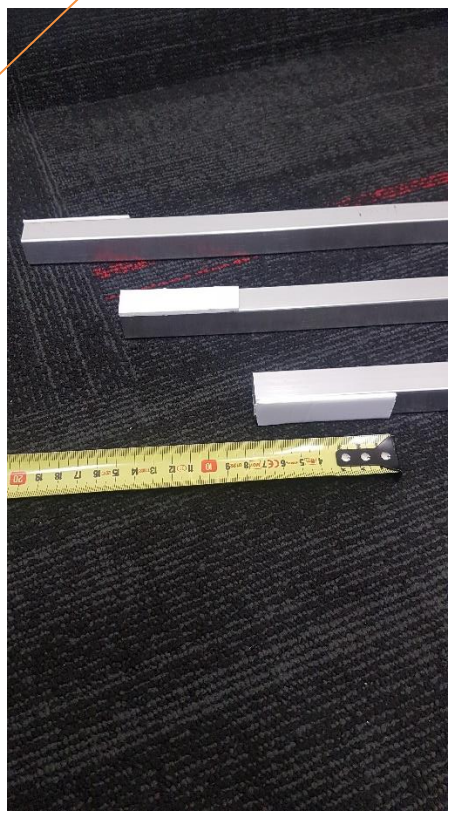

Images of wire butterfly clips to hold cladding:

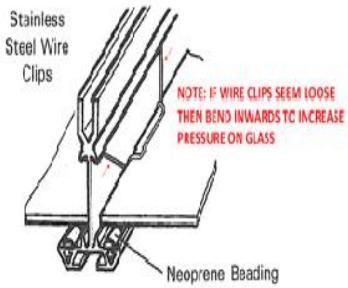

THE BEAST POLYCARBONATE DOUBLE DOOR

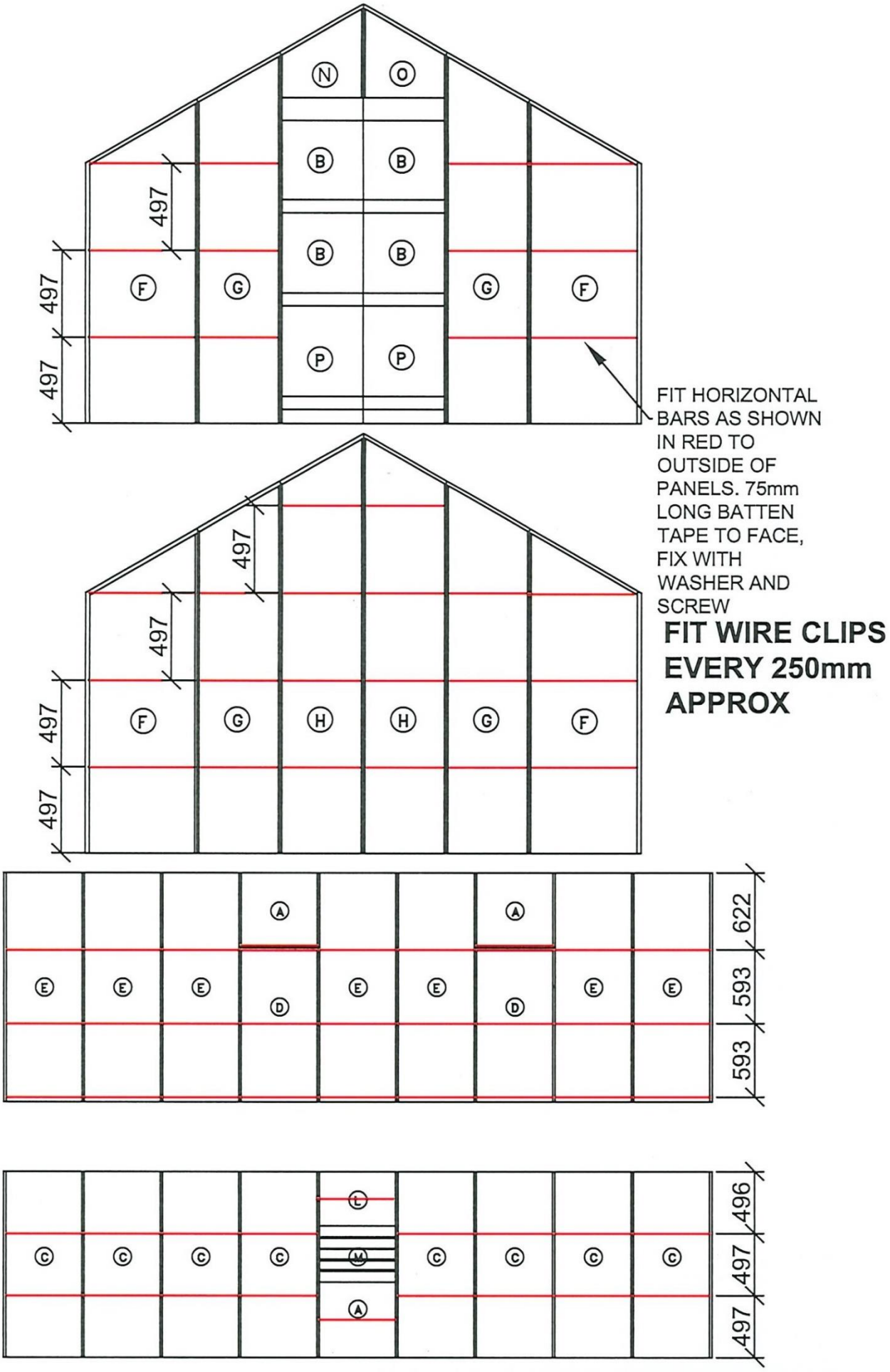

THE BEAST POLYCARBONATE DOUBLE DOOR

Additional Parts	
	5.66m
610mm 20sq	106
457mm 20sq	20
Washers	160
Screws	160
Foil Tape	3
Foam Tape	2

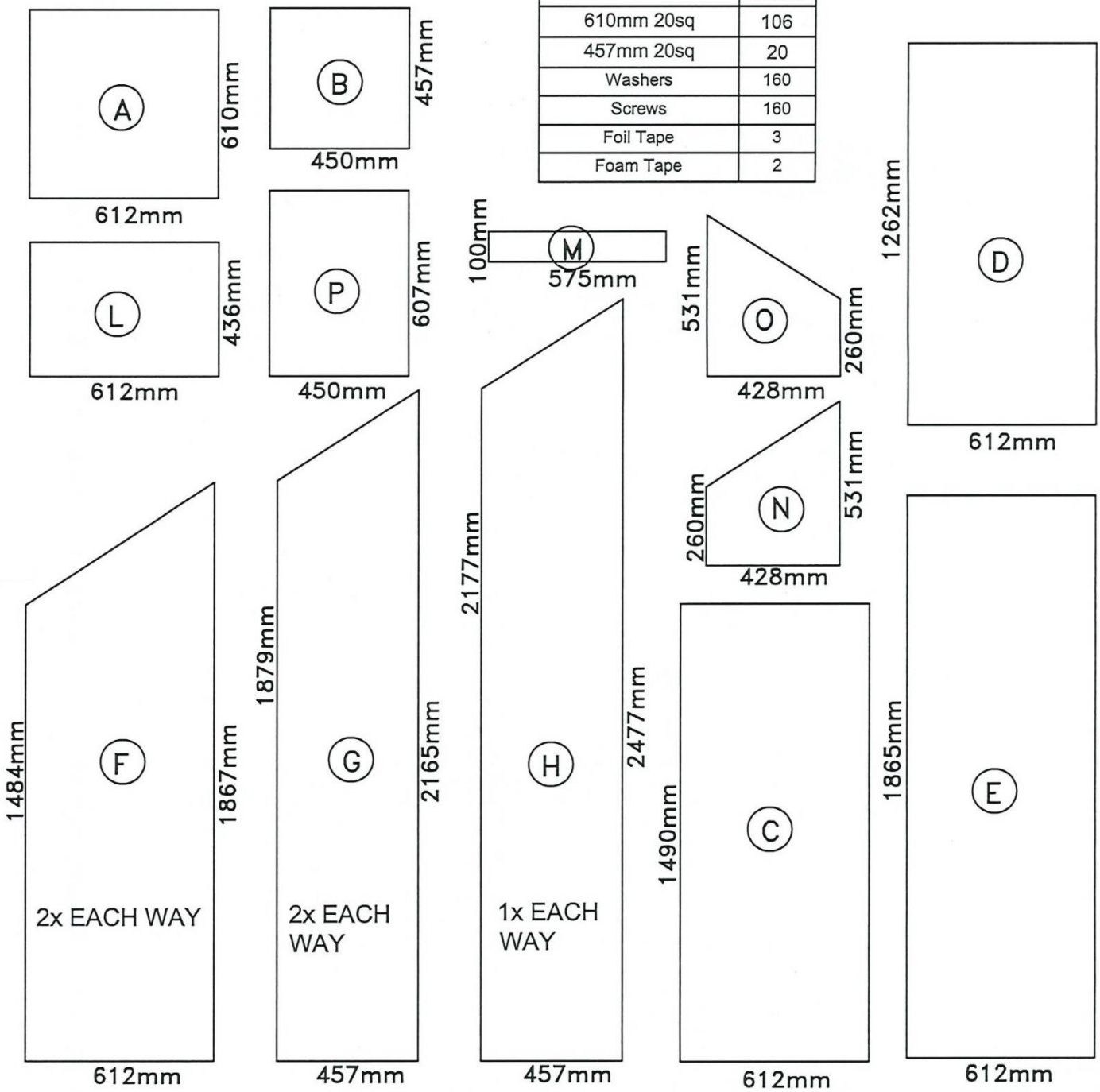

REDPATH POLYCARBONATE HOUSES FULL HEIGHT SHEETS														
QUANTITY	PRODUCT CODE	A	B	C	D	E	F	G	H	L	M	N	O	P
	5.66m BEAST - 2 louvres	6	4	18	4	16	4	4	2	2	10	1	1	2

Polycarbonates is supplied from your local merchant. (The Polycarbonates IS NOT freighted with the polycarbhouse due to the high likelihood of the Polycarbonates being damaged in transit). Redpath will advise your local merchant's for delivery.

Redpath Polycarbhouses – 10 year Warranty Conditions

The supplier (Redpath Pacific Ltd) offers the above warranty on a Pro-rata basis.

The warranty "warrants" that the goods are supplied without manufacturing fault & are designed to provide a minimum useful service life of ten years.

The warranty conditions:

1. The Pro-Rata warranty applies from invoice date of goods

2. The pro rata warranty is for the buildings framework, nuts, bolts, brackets only and does not include those parts that are beneath the ground or any flexible cladding, fastening systems, or other non metal parts.

3. The pro rata warranty does not cover those items that may be judged to be damaged or caused by "fair wear and tear" during the daily use of the building.

4. The pro rata frame warranty does not cover damage from storm, accident damage, unstable or loose ground, in any form that may affect the buildings integrity.

5. The buildings frame & parts includes various coatings for improved resistance to corrosion. These include hot dipped galvanized parts; zinc coatings, powder coating, and paint coatings anodized surfaces, mill finish alloy surfaces. The warranty offers that these coatings will meet the supplier's specification for the building. The warranty does not cover corrosion that exceeds the expected "typical" protection that these coatings are able to offer. This might include damage from chemical sprays or paints, excessive humidity etc.

6. The warranty is not transferable and only applies to new building sales.

7. This pro rata warranty requires that basic maintenance completed by the customer E.G regular cleaning, avoidance of poor operating conditions.

8. Any warranty claim must be advised in writing to Redpath Pacific Ltd immediately upon its discovery. Damaged parts are to be kept and returned to the supplier at the suppliers cost on request.

9. Any warranty for any parts or labour supplied may not be honored if payment for the building is incomplete or not made as per the payment schedule contract.

10. The warranty does not cover <u>any</u> consequential losses or claims of the customer

11. The supplier's liability shall be at minimum the pro-rata cost of the material value only (not labour) of the parts that are claimed to be faulty under the warranty.

12. The warranty assumes that the polycarbhouse has been located in a suitable site that is protected from strong winds. Open plain sites, exposed hill tops, locations with natural wind funneling from buildings or landforms etc should be avoided.

13. The Polycarbonates cladding IS NOT included in the ten year warranty. Unless the Polycarbonates cladding exhibits a manufacturing fault or is damaged prior to use.

- This warranty does not remove any rights that the customer might have under New Zealand Law